BS 8102:2009



BSI Standards Publication

Code of practice for protection of below ground structures against water from the ground

Licensed by Maslic Asphalt Council,Malcolm Grinstead . Current version as of 26 March 2003.
Not to be distributed/networked. If you need multi-user/network access visit www.bsigroup.com/license

bsi.

...making excellence a habit.™

Publishing and copyright information
The BSI copyright notice displayed in this document indicates when the document was last issued.

© BSI 2009

ISBN 978 0 580 59399 4

ICS 91.120.30

The following BSI references relate to the work on this standard:
Committee reference B/526
Draft for comment 09/30168197 DC

Publication history
First published May 1990
Second (present) edition, November 2009

Amendments issued since publication

Date	Text affected

Licensed by Maslic Asphalt Council.Malcolm Grinstead . Current version as of 26 March 2003.
Not to be distributed/networked. If you need multi-user/network access visit www.bsigroup.com/license.

Contents

Foreword *iii*
1 Scope *1*
2 Normative references *1*
3 Terms and definitions *2*
4 Design philosophy *3*
5 Site evaluation *7*
6 Water-resisting design *9*
7 General construction issues *19*
8 Type A (barrier) protection *20*
9 Type B (structurally integral) protection *26*
10 Type C (drained) protection *31*
11 Remedial measures *34*

Bibliography *37*

List of figures
Figure 1 – Design flowchart *6*
Figure 2 – Schematic illustrations of Type A, Type B and Type C waterproofing protection *12*
Figure 3 – Sub-surface drainage positioning *18*
Figure 4 – Effect of structure on applied waterproofing barrier *21*
Figure 5 – Pile to floor slab junction *22*
Figure 6 – Effect of bonded or partially bonded barriers *23*

List of tables
Table 1 – Use of different protection types based on water table classification *15*
Table 2 – Grades of waterproofing protection *16*
Table 3 – Categories of barrier materials *23*

Licensed by Mastic Asphalt Council.Malcolm Grinstead . Current version as of 26 March 2003.
Not to be distributed/networked. If you need multi-user/network access visit www.bsigroup.com/license.

Summary of pages
This document comprises a front cover, an inside front cover, pages i to iv, pages 1 to 38, an inside back cover and a back cover.

Licensed by Maslic Asphalt Council.Malcolm Grinstead . Current version as of 26 March 2003.
Not to be distributed/networked. If you need multi-user/network access visit www.bsigroup.com/license.

This page deliberately left blank

Foreword

Publishing information

This British Standard is published by BSI and came into effect on 30 November 2009. It was prepared by Technical Committee B/526, *Geotechnics*. A list of organizations represented on this committee can be obtained on request to its secretary.

Supersession

This British Standard supersedes BS 8102:1990, which is withdrawn.

Information about this document

This British Standard was originally published in 1990, superseding the earlier CP102 (1973). This is a full revision of the standard, and introduces the following principal changes:

a) a number of recent developments are addressed, which are important when specifying, designing and constructing below ground structures, including:

   1) more deep construction in congested urban areas;

   2) an increase in the provision of residential basements;

   3) development and use of new materials for waterproofing;

b) a more detailed assessment is provided of the risks inherent in below ground construction and how these might best be addressed.

In addition to the introduction of these key changes, the publication of the Eurocodes and the approaching withdrawal of the corresponding British Standards make this revision timely.

It is noted that the figures used in this document are only representative of different installation methods, and should not be translated directly into practice without first checking all the parameters specific to the installation.

Use of this document

As a code of practice, this British Standard takes the form of guidance and recommendations. It should not be quoted as if it were a specification and particular care should be taken to ensure that claims of compliance are not misleading.

Any user claiming compliance with this standard is expected to be able to justify any course of action that deviates from its recommendations.

It has been assumed in the drafting of this document that the execution of its provisions is entrusted to suitably qualified and experienced people, for whose guidance it has been prepared.

Presentational conventions

The provisions in this standard are presented in roman (i.e. upright) type. Its recommendations are expressed in sentences in which the principal auxiliary verb is "should".

Commentary, explanation and general informative material is presented in smaller italic type, and does not constitute a normative element.

Licensed by Mastic Asphalt Council.Malcolm Grinstead . Current version as of 26 March 2003.
Not to be distributed/networked. If you need multi-user/network access visit www.bsigroup.com/license.

Contractual and legal considerations

This publication does not purport to include all the necessary provisions of a contract. Users are responsible for its correct application.

Compliance with a British Standard cannot confer immunity from legal obligations.

Licensed by Maslic Asphalt Council.Malcolm Grinstead . Current version as of 26 March 2003.
Not to be distributed/networked. If you need multi-user/network access visit www.bsigroup.com/license.

1 Scope

This British Standard gives recommendations and provides guidance on methods of dealing with and preventing the entry of water from surrounding ground into a structure below ground level.

It covers the use of:

a) waterproofing barrier materials applied to the structure,

b) structurally integral watertight construction; and

c) drained cavity construction.

It also covers the evaluation of groundwater conditions, risk assessment and options for drainage outside the structure.

It applies to structures which extend below ground level and those on sloping sites.

This British Standard does not give recommendations concerning the use of embedded heating in structures, floors and walls or for the special requirements in connection with the design and construction of cold stores.

NOTE Structures are generally characterized as "deep" if they have more than one storey below ground level, or "shallow" if they have only a single storey below ground. This standard is applicable to both.

2 Normative references

The following referenced documents are indispensable for the application of this document. For dated references only the edition cited applies. For undated references the latest edition of the referenced document (including any amendments) applies.

BS 743:1970, *Specification for materials for damp-proof courses*

BS 5930, *Code of practice for site investigations*

BS 6100-3, *Building and civil engineering – Vocabulary – Part 3: Civil engineering – General*

BS 8004, *Code of practice for foundations*

BS 8204-1, *Screeds, bases and in situ floorings – Part 1: Concrete bases and cement sand levelling screeds to receive floorings – Code of practice*

BS 8747, *Reinforced bitumen membranes (RBMs) for roofing – Guide to selection and specification*

BS EN 1504, *Products and systems for the protection and repair of concrete structures – Definitions, requirements, quality control and evaluation of conformity*

BS EN 1992, *Eurocode 2: Design of concrete structures*

BS EN 1993, *Eurocode 3: Design of steel structures*

BS EN 1993-5, *Eurocode 3: Design of steel structures – Part 5: Piling*

BS EN 1997, *Eurocode 7: Geotechnical design*

BS EN 10210, *Hot finished structural hollow sections of non-alloy and fine grain steels*

BS EN 10219, *Cold formed welded structural hollow sections of non-alloy and fine grain steels*

BS EN 10248, *Hot rolled sheet piling of non alloy steels*

Licensed by Mastic Asphalt Council.Malcolm Grinstead . Current version as of 26 March 2003.
Not to be distributed/networked. If you need multi-user/network access visit www.bsigroup.com/license.

BS EN 10249, *Cold formed sheet piling of non alloy steels*

BS EN 12063, *Execution of special geotechnical work – Sheet pile walls*

BS EN 12970, *Mastic asphalt for waterproofing – Definitions, requirements and test methods*

3 Terms and definitions

For the purposes of this British Standard, the terms and definitions given in BS 6100-3 and the following apply.

3.1 cavity drain membrane
dimpled, flexible, high-density polymer sheet, which can be placed against the internal face of a structure after construction and is designed to intercept water penetrating the structure and direct it to a drainage system

3.2 cut-off wall
embedded retaining wall (see **3.4**) designed to surround and seal-off an area, to inhibit water inflow from the surrounding area

3.3 damp area
area which, when touched, might leave a light film of moisture on the hand but no droplets of water (i.e. beading)

NOTE This definition has been taken from the ICE publication, Specification for piling and embedded retaining walls [1].

3.4 embedded retaining wall
wall used to support the sides of an excavation, installed in advance and penetrating below the lowest level of the below ground construction

NOTE Within this standard the principal forms considered constitute the primary permanent wall for the below ground construction, and are taken as diaphragm walls, contiguous or secant piles (which may be installed in different configurations) or steel sheet piles.

3.5 ground barrier
impermeable barrier between the structure and the ground intended to prevent or impede the ingress of water, dampness, radon, methane and other ground gases and contaminants

3.6 loading coat
layer of material designed to hold a Type A waterproofing material in place when resisting water pressure

3.7 perched water table
reservoir of water in the ground maintained permanently or temporarily above the standing water level in the ground below it, and is caused by the presence of an impervious soil or a stratum of low permeability

3.8 seepage
slow transmission of water through discrete pathways of a structure

NOTE This can also be known as weeping, as defined in ICE publication, Specification for piling and embedded retaining walls *[1].*

3.9 tanking
application of an appropriate waterproofing barrier to the walls, the base slab and, where relevant, the roof of a below ground structure, such that the entire envelope of the structure below ground is protected against water ingress

NOTE A cavity drain membrane is not considered to constitute tanking.

Licensed by Mastic Asphalt Council.Malcolm Grinstead . Current version as of 26 March 2003.
Not to be distributed/networked. If you need multi-user/network access visit www.bsigroup.com/license.

3.10 Type A (barrier) protection
protection against water ingress which is dependent on a separate barrier system applied to the structure

3.11 Type B (structurally integral) protection
protection against water ingress which is provided by the structure

3.12 Type C (drained) protection
protection against water ingress into usable spaces which is provided by the incorporation of an appropriate internal water management system

3.13 vapour check
membrane or other element that restricts the transmission of water vapour

3.14 waterproof
impervious to water

NOTE This can also be known as "watertight".

3.15 waterproofing
application of waterproof/water-resisting materials

3.16 waterproofing barrier
material that does not permit the transmission of free water, but might allow some water vapour permeability

3.17 waterproofing system
materials and methods used to protect a structure from water ingress and might also provide resistance to the diffusion of water vapour

3.18 water resistance
ability of a material to resist water penetration

3.19 waterstop
material designed to inhibit the transmission of water through joints in the structure

3.20 water vapour
water in its gaseous state

3.21 water vapour resistance
ability of a material to resist water vapour penetration

4 Design philosophy

4.1 General

It is essential for the success of any project involving below ground structures that strategies for dealing with groundwater, soil gases and contaminants are considered from the very earliest stages of the planning and design processes.

For new structures, it is recommended that the structural design, overall weatherproofing design, waterproofing design and construction processes are considered together, as they generally interact.

In addition, it is recommended that, during the design process and at all stages of the construction process, the designers, specialists, manufacturers/suppliers and installing contractors establish and

Licensed by Maslic Asphalt Council.Malcolm Grinstead . Current version as of 26 March 2003.
Not to be distributed/networked. If you need multi-user/network access visit www.bsigroup.com/license.

maintain effective channels of communication. Regular and clear communication coupled with good site supervision allows variations and amendments to the design to be planned and executed without compromising the performance of the waterproofed structure (see also **4.2**).

4.2 Design team

The advice of a geotechnical specialist should be sought on the geology and hydrogeology, the external drainage options and groundwater conditions (see Clause **5**).

A waterproofing specialist should be included as part of the design team so that an integrated waterproofing solution is created. The waterproofing specialist should:

a) be suitably experienced;

b) be capable of devising solutions that accommodate the various project constraints and needs;

c) provide the design team with information and guidance that assists with and influences the design, installation and future maintenance of the waterproofed structure.

NOTE The waterproofing specialist could be the manufacturer or material supplier, provided that the manufacturer/supplier has the relevant expertise.

All design decisions made by others that might have an impact on the waterproofing design should be brought to the attention of the waterproofing specialist/designer and installing contractors. Final decisions and any recommendations should be approved by the designer.

4.3 Principal considerations

4.3.1 General

In order to develop a robust design for protecting a structure against groundwater, the following factors should be assessed:

a) the likely highest level of the water table, the drainage characteristics of the soil and other site-specific properties (see Clause **5**);

b) the appropriate waterproofing measures (see Clause **6**), i.e. Type A, B or C protection and, where necessary, external drainage based on:

   1) the results of the site evaluation, including the classification of the water table; and

   2) the intended use of structure**,** with consideration given to any requirement for future flexibility. This should be undertaken in consultation with the client;

c) the appropriate type of primary waterproofing system (see Clause **8**, Clause **9** and Clause **10**).

NOTE 1 The general principle is to assess the risk of water reaching the structure and then to select a waterproofing system capable of achieving the required internal environment.

Licensed by Mastic Asphalt Council.Malcolm Grinstead. Current version as of 26 March 2003.
Not to be distributed/networked. If you need multi-user/network access visit www.bsigroup.com/license.

NOTE 2 Mechanical heating and ventilation often play an important role in creating the internal environment, particularly where higher grades are required. The design of such systems is a specialist activity, outside the scope of this standard.

Condensation may also be controlled by the provision of adequate ventilation (assisted by heating), coupled with the suitable treatment of floor and wall surfaces.

A three-dimensional review of structure and waterproofing should be undertaken so as to identify any complex geometries, which are not readily identified from normal two-dimensional details.

Service entries are particularly vulnerable to water penetration; where they cannot be avoided, they should be carefully detailed, incorporating sealing, to minimize the risk of water ingress (see **8.1.3**).

NOTE 3 The three-dimensional review needs to include detailed information on the proposed waterproofing system (e.g. the effect that this has on wall base details, laps in membranes and waterstops). Examples of complex geometries are corner details and where the wall adjoins: the base slab/foundation; the superstructure; differing floor levels; and windows below ground.

4.3.2 Defects and remedial measures

An ideal waterproofing solution would be defect-free. However, it should be noted that two types of defects might occur in any waterproofing, where a structure is subjected to water pressure, and this could mean that the required internal environment is not achieved. These defects are as follows:

a) defects owing to poor workmanship or the inappropriate use of materials;

b) defects owing to the specific properties of the materials being used.

NOTE Reference to "defects" does not apply to normal designed flexural cracks or surface crazing in concrete elements but only to through cracking, which might need to be locally sealed.

It is essential that the construction methods and materials used to realise the design are such that the defects in a) are avoided.

The defects in b), which are generally minor, should be recognized and catered for in the design. Contingency planning for dealing with any localized defects or system failure that arise should be included as part of the overall water-resisting design for the structure (see also Clause **11**).

In either case, the issue of repairability should be taken into account and the feasibility of remedial measures assessed.

Licensed by Maslic Asphalt Council.Malcolm Grinstead . Current version as of 26 March 2003.
Not to be distributed/networked. If you need multi-user/network access visit www.bsigroup.com/license.

Figure 1 **Design flowchart**

COMMENTARY ON FIGURE 1
Figure 1 outlines the principal factors and stages that need to be addressed in order to produce a robust waterproofing solution for a below ground structure.

It demonstrates that some matters are interrelated and that a degree of iteration might result from a need to address buildability and repairability. The principal issues (boxes) do not necessarily need to be addressed in the order shown but all need to be understood and evaluated.

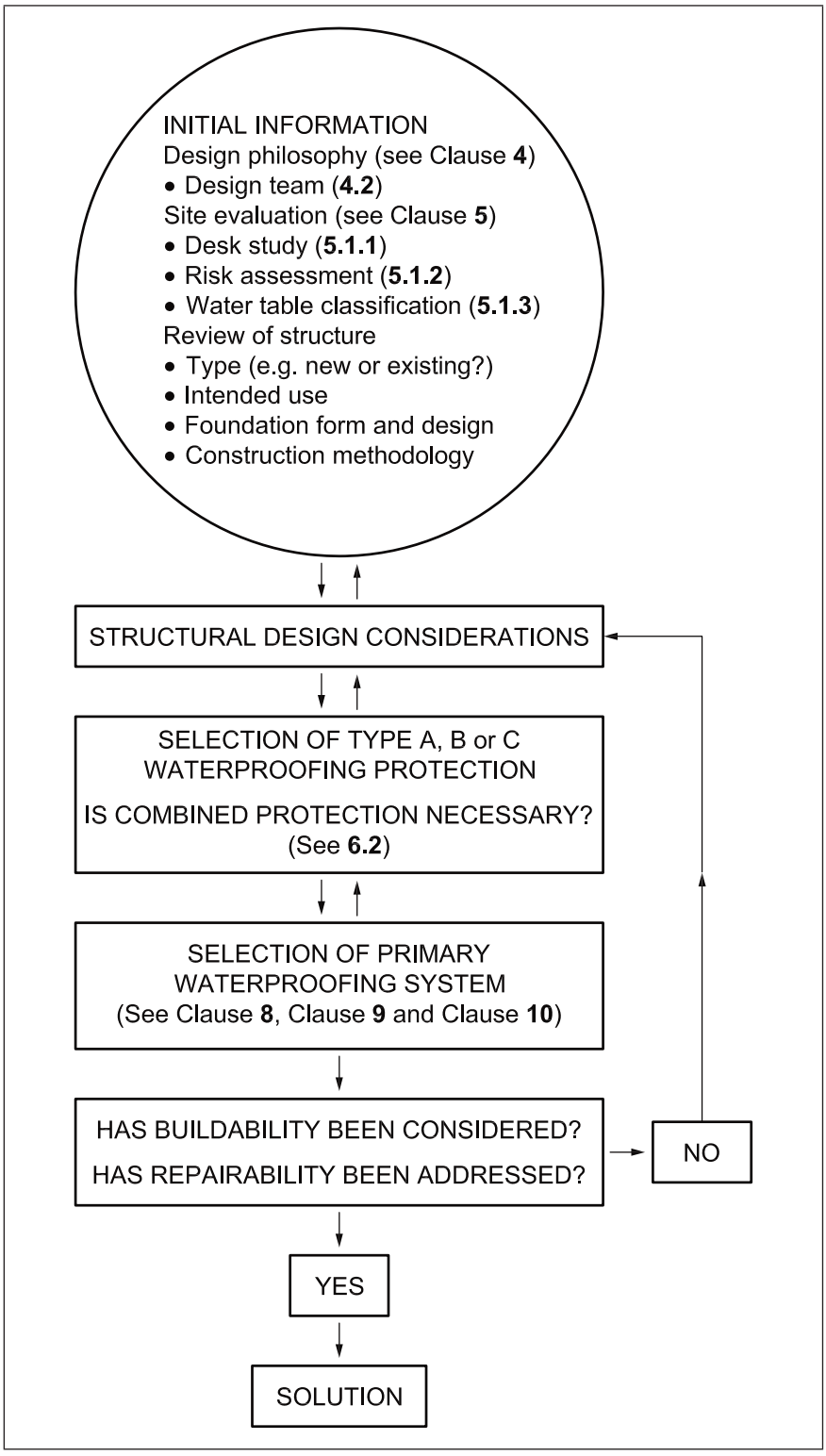

Licensed by Mastic Asphalt Council:Malcolm Grinstead. Current version as of 26 March 2003.
Not to be distributed/networked. If you need multi-user/network access visit www.bsigroup.com/license.

5 Site evaluation

*COMMENTARY ON CLAUSE **5***

Attention is drawn to the fact that many of the issues addressed in this clause are also relevant to the design of the structure itself. For further guidance, see the relevant Eurocodes, e.g. BS EN 1992 or BS EN 1997.

5.1 General

5.1.1 Desk study

A desk study should be carried out in accordance with BS 5930 and BS EN 1997:

a) to assess the geology and hydrogeology, including soil permeabilities, flood risk, radon, methane and other ground gases and contaminants (e.g. chlorides and acids);

b) to assess the topography of the surrounding ground in relation to the below ground structure;

c) to establish the likely highest level of the water table and the potential for the occurrence of a perched water table; and

d) to identify any missing ground and groundwater information, which should then be obtained by undertaking a site investigation in accordance with BS 5930 and BS EN 1997.

NOTE Guidance on best practice in ground investigation, laboratory and field-testing for embedded retaining walls is given in CIRIA publication C580 [2].

The drainage characteristics from analysis of the soil should be determined in accordance with BS 8004.

5.1.2 Risk assessment

NOTE 1 The principal risks with respect to water ingress into structures are the external environmental conditions.

A risk assessment should be carried out which considers the long-term water pressures, the effects of surface water infiltration and the use of external drainage and cut-off walls.

Risk assessment should also consider:

a) the effects of climate change, burst water mains and sewers, adjacent trees, sulfates, radon, methane and other ground gases and contaminants; and

b) where external drainage is proposed, the effects of drawdown on adjacent structures, the potential silting of drainage and biofouling issues.

Even when the site investigation indicates dry conditions, the risk of some waterlogging (see Note 2) in the future should be assumed.

NOTE 2 Even in a permeable subsoil, groundwater requires time to drain away and this can result in limited pressure periodically coming to bear against the structure.

Licensed by Maslic Asphalt Council.Malcolm Grinstead . Current version as of 26 March 2003.
Not to be distributed/networked. If you need multi-user/network access visit www.bsigroup.com/license.

5.1.3 Water table classification

Where assessment of the water table is undertaken, this should be classed into the following three categories, which can then be used to determine the suitability of different types of waterproofing protection (see **6.2**).

- High – where the water table or perched water table is assessed to be permanently above the underside of the base slab.
- Low – where the water table or perched water table is assessed to be permanently below the underside of the base slab. This only applies to free-draining strata.
- Variable – where the water table fluctuates.

*NOTE In certain ground conditions, external drainage systems can be used to convert the "high" and "variable" water tables to the "low" condition (see also **6.3**).*

5.2 Inspection and survey for existing structures

5.2.1 General

Following an assessment of the external risk (see **5.1.2**), a comprehensive survey should be undertaken of any existing waterproofing arrangements.

The structure should also be examined in order to determine any potential movement that might occur between the walls and floor.

NOTE 1 The base slab of many older structures is likely to abut the external walls. This can give rise to movement between wall and floor. Special flexible joint details might be required so that strains in the waterproofing materials are controlled within acceptable limits where bonded or surface-applied barrier materials are used in such situations. Similar details might also be required at other locations where structural movement can occur.

NOTE 2 Less movement would be expected in cases where the floor is set into the wall although horizontal movement can occur unless the floor is reinforced such as to achieve the necessary fixity.

As the space available in below ground structures is often converted into habitable rooms during refurbishments, the survey should also consider the previous use, e.g. this might have been such that dampness was of less concern than for the proposed use.

NOTE 3 Existing waterproofing might have to be removed completely and replaced with an entirely new system, although in some instances it might be possible to apply a Type A barrier or a Type C drained cavity system directly. These systems can be considered where there is no existing waterproofing but the suitability of Type A barrier materials depends on the characteristics of the surface of the wall or floor.

5.2.2 External walls

An old external cavity form of waterproofing protection might be encountered that is not immediately obvious. Where an external cavity is found, it should be inspected to confirm that:

a) the cavity is not bridged by debris;

b) any drainage is still functioning and has not been silted up; and

c) air bricks are not obstructed by soil or vegetation.

Licensed by Mastic Asphalt Council.Malcolm Grinstead. Current version as of 26 March 2003.
Not to be distributed/networked. If you need multi-user/network access visit www.bsigroup.com/license.

NOTE 1 An example of an external cavity is where an inner wall, load-bearing or otherwise, has been built with a cavity between it and an earlier retaining wall. This cavity might be closed/capped with a plinth, and would typically be drained at the base and ventilated by air bricks.

It should be established whether walls are earth retaining or free standing as there might be instances where the waterproofing measures have not been continued along internal walls abutting the external retaining wall.

NOTE 2 Where the external wall is of solid construction, there might be no waterproofing or there might have been previous attempts to mask dampness. Many such applications can be incomplete or ineffective. It is possible that the attempted waterproofing was inappropriate for the prevailing external conditions or the wall surface to which it had been applied.

The survey should include any constructions which abut the main structure, such as garden walls and arches under steps, as these are a potential source of moisture transfer.

5.2.3 Floor

Where drainage tiles have been used to cover the floor, they should be assessed to confirm that they have sufficient strength to withstand loadings from walls, plant, equipment, vehicles, etc., appropriate to the intended use.

Where no-fines concrete has been used as a drainage layer, this should be similarly assessed to confirm that it has sufficient strength to withstand loadings and is still draining effectively.

NOTE 1 Drainage tiles are typically made from clay or concrete. Both tiles and no-fines concrete have widely been replaced by cavity drain membranes.

The floor should be thoroughly surveyed for signs of moisture penetration.

NOTE 2 Moisture from the ground can move across abutting constructions at any level and in some conditions running water might be encountered.

Consideration should also be given to:

a) the ability of any surface to accept the proposed waterproofing;

b) the effect that any proposed waterproofing system is likely to have on stresses imposed on the existing structure by groundwater once the waterproofing system has been installed.

6 Water-resisting design

6.1 Groundwater

Waterproofing measures should be designed on the basis of water to the full height of the retained ground at some time during the structure's life where:

a) no detailed geological or hydrogeological assessment has been undertaken;

b) the results of the soil investigations are inconclusive with respect to groundwater;

Licensed by Maslic Asphalt Council,Malcolm Grinstead . Current version as of 26 March 2003.
Not to be distributed/networked. If you need multi-user/network access visit www.bsigroup.com/license.

c) the ground drainage characteristics are unreliable;

d) the drainage measures (either internal or external) are unreliable or un-maintainable and infiltration cannot be controlled.

Protection against water ingress from the following three sources should be considered:

1) the inflow of surface water, ranging from percolation of rain to inundation of water from burst water mains (see **6.3**);

2) the water pressures acting on the external retaining wall system;

3) the water pressures below the base slab.

The water-resisting design should enable the system to withstand a pre-determined head of water or control the water before it reaches the structure.

One or both of the following methods may be used, in conjunction with the waterproofing protection (see **6.2**), to reduce water penetration, depending on the conditions of the site and the required internal environment:

i) exclusion of surface water (see **6.3**);

ii) sub-surface drainage (see **6.4**).

6.2 Waterproofing protection

6.2.1 General

One, or a combination, of the following types of waterproofing protection should be selected:

a) Type A (barrier) protection;

b) Type B (structurally integral) protection;

c) Type C (drained) protection.

When making this selection, consideration should be given to:

1) the need for combined protection (see **6.2.2**);

2) the water table classification and required performance level (see **6.2.3**);

3) the need for continuity in the protection (see **6.2.4**).

NOTE Examples of the three types of waterproofing protection are given in Figure 2.

There is a range of waterproofing systems that can be incorporated in each type of waterproofing protection and these should be assessed in accordance with Clause **8**, Clause **9** and Clause **10**, as appropriate, and relevant manufacturers' data sheets to confirm that the system selected is suitable for the structure to which it is to be applied.

It is noted that the manufacturer's recommendations for installation, including provision of protection, should always be followed. Similarly, recommendations for fixings where proprietary products are used should be followed.

Licensed by Mastic Asphalt Council.Malcolm Grinstead . Current version as of 26 March 2003.
Not to be distributed/networked. If you need multi-user/network access visit www.bsigroup.com/license.

In cases where the below ground structure is fully buried or the substructure extends beyond the superstructure, protection should be provided against water ingress through the roof slab, for example by:

i) encouraging water to drain away from the structure;

ii) providing drainage above the roof slab;

iii) using an external barrier.

For existing structures, the following types of waterproofing systems should be considered, subject to their suitability for application and their ability to be repaired:

- an internal Type A waterproofing barrier on a structure of suitable strength and stiffness, built of concrete or masonry (subject to the condition of the surface) [see Figure 2a)];
- a drained cavity to the walls and floor, using a Type C cavity drain system [see Figure 2c)].

In situations where the use of a waterproofing system covered by this standard is either not achievable or not cost effective, other methods may be used if they can be shown to lead to similar results. However, the risks and implications of such methods should be investigated and recorded.

6.2.2 Combined protection

Consideration should be given to the use of combined protection (i.e. Type A and Type B, Type A and Type C or Type B and Type C) where in a single system:

a) the assessed risks are deemed to be high (see Clause **5**);

b) the consequences of failure to achieve the required internal environment are too high; or

c) additional vapour checks are necessary for a system where unacceptable water vapour transmission can occur.

Although structures with Type B protection are designed to be water resistant, additional waterproofing systems may be applied internally or externally to control water vapour movement, where appropriate.

An in-situ "liner" wall designed to provide Type B protection can be cast inside an embedded retaining wall to provide combined protection. In some cases, a fully bonded barrier might also be provided between the two elements.

Although structures with Type C protection are designed to control and manage seepage into a structure, where this is unacceptably high the water resistance of the structure should be improved prior to the installation of the Type C protection, by the application of either Type A or Type B protection.

When combining types of protection, the compatibility of the different protection types should be assessed in order to minimize the risks and negate the need for remedial measures.

Licensed by Maslic Asphalt Council.Malcolm Grinstead . Current version as of 26 March 2003.
Not to be distributed/networked. If you need multi-user/network access visit www.bsigroup.com/license.

Figure 2 **Schematic illustrations of Type A, Type B and Type C waterproofing protection**

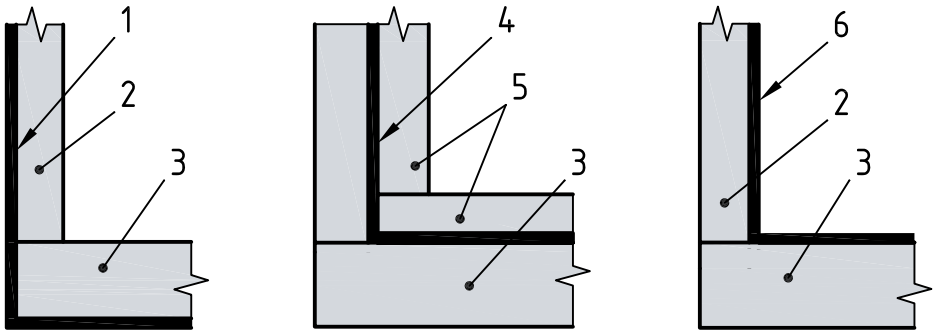

a) Type A (barrier) protection

Key

1 External waterproofing
2 Masonry or concrete wall, as appropriate (see Table 1)
3 Concrete floor slab
4 Sandwiched waterproofing
5 Loading coat
6 Internal waterproofing

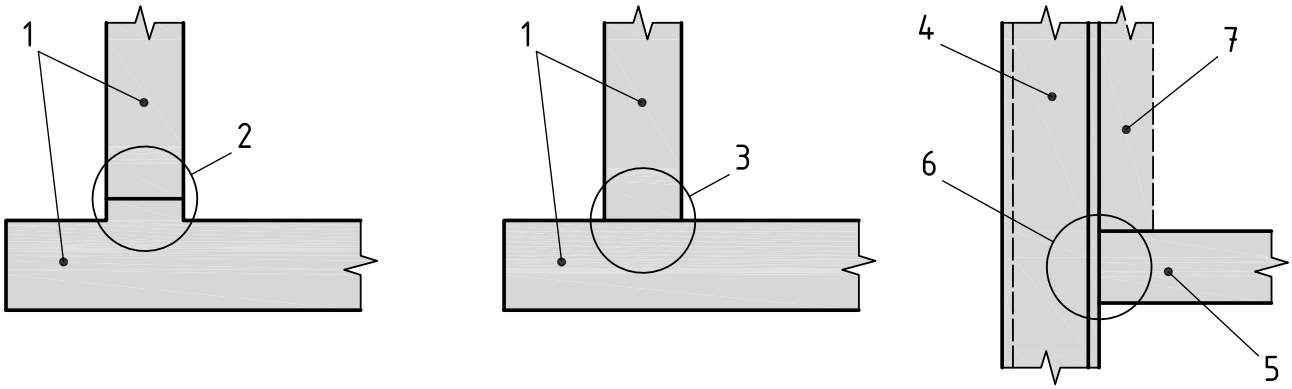

b) Type B (structurally integral) protection

Key

1 Water-resistant reinforced concrete wall and slab
2 External or internal (within wall) waterstop, as required
3 Waterstop required at junction between wall and slab and at all construction joints
4 Concrete/steel piled wall
5 Water-resistant reinforced concrete floor slab or slab with added barrier
6 Waterstop at junction to follow profile of wall
7 Piled wall might need to be faced to achieve desired water resistance (see Table 1)

NOTE Seek the manufacturer's advice with respect to waterstops to suit the specific construction.

Licensed by Mastic Asphalt Council/Malcolm Grinstead. Current version as of 26 March 2003.
Not to be distributed/networked. If you need multi-user/network access visit www.bsigroup.com/license.

Figure 2 **Schematic illustrations of Type A, Type B and Type C waterproofing protection** *(continued)*

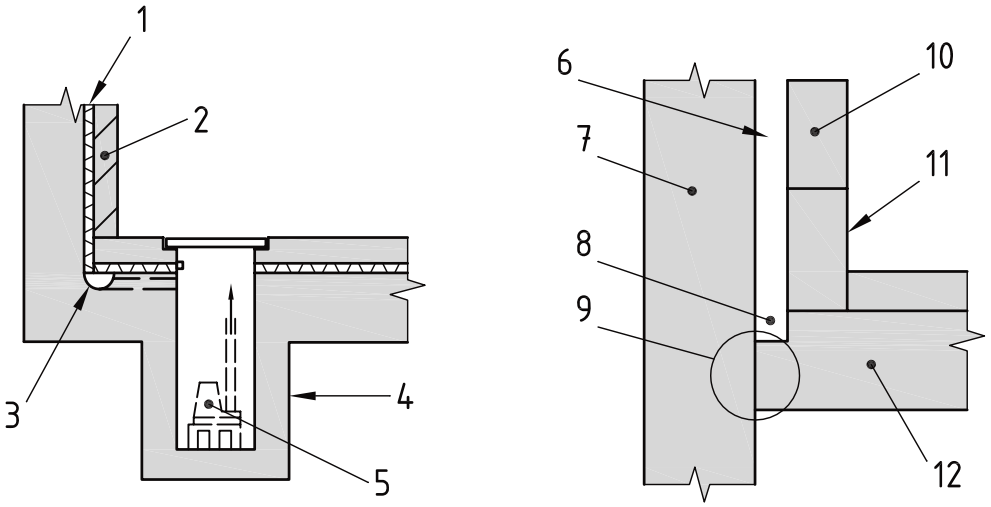

c) Type C (drained) protection

Key

1 Cavity drain membrane
2 Inner skin (render, dry lining or walling, depending on system)
3 Maintainable drainage channel with pipe connection to suitable discharge point
4 Sump formed in situ or pre-formed
5 Pump
6 Wall cavity
7 Reinforced concrete/steel pile or diaphragm wall
8 Drainage channel
9 Waterstop at junction to follow wall profile
10 Internal block wall
11 Access point(s) to drainage
12 Floor slab with integral protection and/or added membrane (internal or external)

Licensed by Mastic Asphalt Council:Malcolm Grinstead. Current version as of 26 March 2003.
Not to be distributed/networked. If you need multi-user/network access visit www.bsigroup.com/license.

6.2.3 Water table classification and grades of waterproofing protection

When selecting a type of waterproofing protection, Table 1 and Table 2 should be taken into account, in conjunction with the following points.

a) During the life of the structure, some degree of groundwater pressure is likely to build up against the chosen waterproofing system.

b) Cracking or defective construction joints can provide a potential path for water ingress.

c) Water ingress can occur where there is groundwater pressure. If this is not consistent with the required performance level (see Table 2):

   1) consideration should be given to the form and feasibility of remedial work;

   2) if remedial work is not possible, the design should be altered.

d) There are a number of risks associated with not carrying out planned maintenance for structures with Type C protection, e.g. pump failure (see **10.3**).

The designer should discuss these points with the client prior to deciding on which type(s) of waterproofing protection to use. The following should also be taken into account:

1) initial capital costs compared with costs for future maintenance and any necessary upgrades;

2) the scope for testing during installation;

3) the risks associated with aggressive groundwater and other ground contaminants, which might require the use of a specific protection barrier;

4) the need or ability to provide heating and/or ventilation and the consequences arising in terms of water vapour.

*NOTE This might call for the adoption of an improved grade of waterproofing protection (see Table 1 and **6.2.2**) or active environmental control in order to manage water vapour (see Table 2).*

Licensed by Maslic Asphalt Council.Malcolm Grinstead . Current version as of 26 March 2003.
Not to be distributed/networked. If you need multi-user/network access visit www.bsigroup.com/license.

Licensed by Mastic Asphalt Council,Malcolm Grinstead. Current version as of 26 March 2003.
Not to be distributed/networked. If you need multi-user/network access visit www.bsigroup.com/license.

Table 1 **Use of different protection types based on water table classification**

Risk associated with water table	**Water table classification** (see Note)	**Waterproofing protection**			
		Type A	**Type B**		**Type C**
			Piled wall	**Reinforced concrete wall to BS EN 1992**	
Low	Low	Acceptable	Acceptable	Acceptable	Acceptable
↑	Variable	Acceptable if the "variable" classification is due to surface water. The manufacturer's advice should be sought.	Acceptable where: a) the piled wall is directly accessible for repair and maintenance from inside the structure; or b) the piled wall is combined with a fully bonded waterproofing barrier; or c) the piled wall is faced internally with a concrete wall to BS EN 1992.	Acceptable	Acceptable
↓	High	Acceptable where: a) an appropriate cementitious multi-coat render or cementitious coatings are used; b) the wall is of concrete to BS EN 1992.		Acceptable	Acceptable
High					
Measures to reduce risk		• Use combined protection (see **6.2.2**). • Incorporate appropriately designed sub-surface drainage and ensure that this is maintained (see **6.4**). • Use a fully bonded waterproofing barrier (see Figure 6). • Lower the permeability of the main structural wall. • Use concrete with a waterproofing admixture, e.g. to BS EN 934 (see **9.2.1.5**). • Ensure that discharge systems, e.g. pumps, are maintained so that the system remains effective (see **10.3.1**).			

*NOTE The water table classifications are defined as follows (see also **5.1.3**).*

- *Low – where the water table or perched water table is assessed to be permanently below the underside of the base slab. This only applies to free-draining strata.*
- *Variable – where the water table fluctuates.*
- *High – where the water table or perched water table is assessed to be permanently above the underside of the base slab.*

*Ground permeability might affect risk under a low or variable water table (see **5.1**).*

Table 2 **Grades of waterproofing protection**

Grade	Example of use of structure [A)]	Performance level
1	Car parking; plant rooms (excluding electrical equipment); workshops	Some seepage and damp areas tolerable, dependent on the intended use [B)] Local drainage might be necessary to deal with seepage
2	Plant rooms and workshops requiring a drier environment (than Grade 1); storage areas	No water penetration acceptable Damp areas tolerable; ventilation might be required
3	Ventilated residential and commercial areas, including offices, restaurants etc.; leisure centres	No water penetration acceptable Ventilation, dehumidification or air conditioning necessary, appropriate to the intended use

A) The previous edition of this standard referred to Grade 4 environments. However, this grade has not been retained as its only difference from Grade 3 is the performance level related to ventilation, dehumidification or air conditioning (see BS 5454 for recommendations for the storage and exhibition of archival documents). The structural form for Grade 4 could be the same or similar to Grade 3.

B) Seepage and damp areas for some forms of construction can be quantified by reference to industry standards, such as the ICE's S*pecification for piling and embedded retaining walls* [1].

Licensed by Mastic Asphalt Council.Malcolm Grinstead. Current version as of 26 March 2003.
Not to be distributed/networked. If you need multi-user/network access visit www.bsigroup.com/license.

6.2.4 Continuity of waterproofing protection

The need for continuity in the waterproofing protection should also be considered when selecting a type of protection. In most circumstances, the protection should be continuous. In certain situations, e.g. where a drained cavity is combined with an underslab membrane, discontinuity with respect to waterproofing can be acceptable subject to careful detailing and an appropriate assessment of risk (see **5.1.2** and Note 2). Any build up of water should be permanently controlled by a water management system.

The proposed type of foundation and its suitability for providing continuity of waterproofing (where so required) should be assessed.

NOTE 1 Continuity can be provided in situations where the surface or structure of the wall and foundation provides uninterrupted positioning of the waterproofing measures.

In existing structures, assessment of any direct or potential discontinuity should be undertaken in order to determine the need for special waterproofing details, e.g. to overcome the effects of future movement.

*NOTE 2 Discontinuity of waterproofing protection might not be acceptable if there is a need to manage radon, methane and other ground gases and contaminants (see **6.5**).*

6.3 Exclusion of surface water

Where practicable, provision should be made to prevent or reduce percolation of rainwater into the ground.

NOTE 1 BS EN 752 gives guidance on collecting and disposing of surface and sub-surface water.

NOTE 2 Burst water mains and leaky sewers can provide additional sources of surface water. These can affect perched water tables. The drainage behind the wall needs to be able to cope with the highest inflow rates, e.g. the burst water main, which might not be practicable in coarse-grained soils.

6.4 Sub-surface drainage

Where sub-surface drainage is deemed necessary to lower the potential for hydrostatic pressure on the waterproofing system and lessen the risk of water ingress through defects, it should be provided by one of the following methods:

a) permeable granular fill;

b) no-fines or hollow blockwork;

c) geosynthetic drainage composite;

d) underslab drainage.

NOTE 1 Figure 3 gives examples of the positioning of land drains, drainage channels and sub-surface drainage.

Such provisions should be made maintainable where they are used to control the level of water in a structure that does not in itself provide adequate water resistance.

Where practicable, water should be kept from prolonged contact with perimeter structure walls or base slabs by porous or open jointed land drains, combined with a geosynthetic drainage composite installed to the full height of the earth-retaining wall and laid to proper falls around the perimeter of the structure, adjacent to the wall footing and, where appropriate, beneath the slab itself.

The sub-surface system should be graded to an open outlet below the level of the lowest slab, such as to a stormwater drain protected by a pumped surcharge device or to a pumped sump, and can also provide a suitable outfall for any sub-floor drainage.

Perimeter drainage at floor level is likely to lower the groundwater table to a degree that varies with the permeability of the subsoil and the possible consequences of this (such as permanent lowering of the water table in the surrounding area) should be taken into account. Any existing system of land drains should be tested, checked and only retained if both appropriate and maintainable. Any local diversions necessary should retain the existing geometry so far as practicable with new and easily maintainable pipework.

Care should be taken so that no damage is caused in nearby structures. Where deep structures are contemplated in built-up areas, groundwater lowering should not be undertaken without careful investigation in conjunction with a groundwater specialist (see **4.2**). Perimeter walls providing a cut-off into an impervious layer or stabilization of granular subsoils by grout injection or similar alternative treatments may be considered instead.

*NOTE 2 For structures in coarse-grained soil, with variable and high water tables (see **5.1.3**), the flow rates are likely to make it impracticable to pump for the design life of the structure. In these cases, a hydraulic cut-off wall into fine-grained soils is required to isolate the ground below the base slab. This enables an underslab drainage system to relieve the water pressure below the base slab.*

*NOTE 3 For structures in fine-grained soil, with variable and high water tables (see **5.1.3**), the flow rates are more likely to make it practical to pump for the design life of the structure. A drainage system may be provided outside the retaining wall to control the water pressures. An underslab drainage system may also be provided below the base slab to control the water pressures.*

Licensed by Maslic Asphalt Council.Malcolm Grinstead . Current version as of 26 March 2003.
Not to be distributed/networked. If you need multi-user/network access visit www.bsigroup.com/license.

Cut-off walls are formed from diaphragm walls, secant piles or steel piles. Over the excavated wall depth remedial works can be carried out on leaky walls. This is not feasible for the length of wall below formation. Therefore, specified tolerances should be such that there is adequate intersection between piles or provision of continuous water bars at diaphragm wall panel joints and particular attention should be given to workmanship.

In interbedded soils, relief wells may be used below formation level. The cut-off wall may also be used to reduce the flow rate and control the drawdown outside the site.

Figure 3 **Sub-surface drainage positioning**

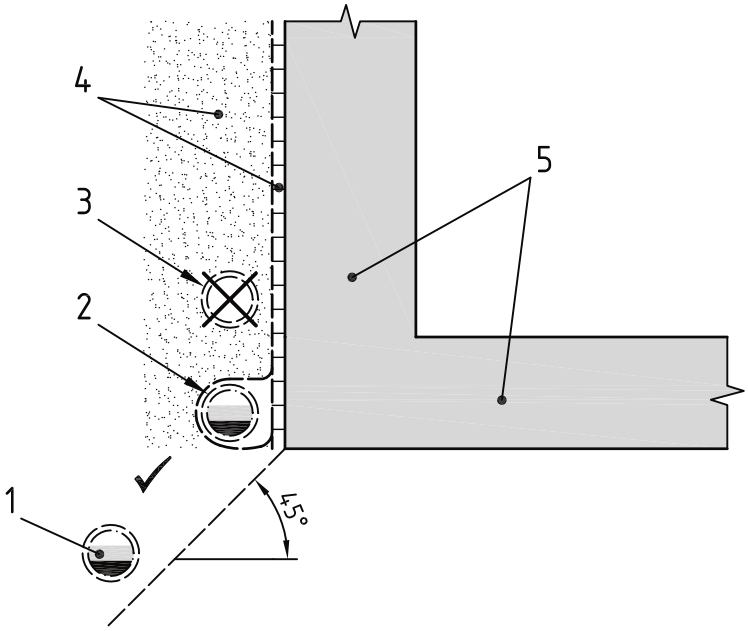

a) Construction without a toe

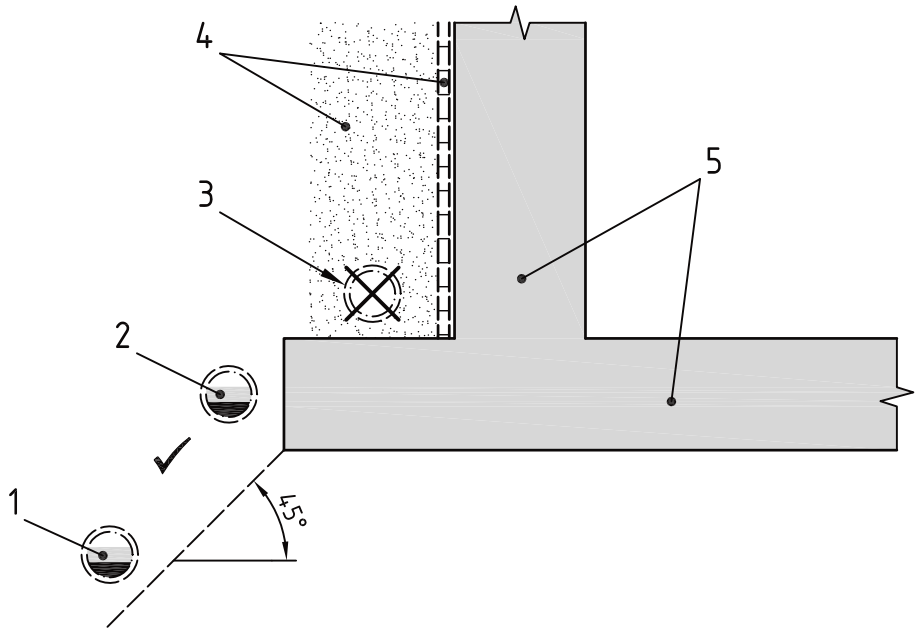

b) Construction with a toe

Key

1 Maintainable land drain (see **6.4**) not to be positioned closer than a line of 45° from the underside of the slab/blinding or with an invert above the upper surface of the floor slab

2 Measures to control water vapour might be necessary where the invert of the land drain is above the underside of the floor slab

3 Incorrect position of land drain, which can cause hydrostatic pressure on barrier leading to water ingress if defects are present

4 Subsoil drainage layer, where appropriate (see **6.4**)

5 Structural wall and foundation slab

Licensed by Maslic Asphalt Council,Malcolm Grinstead . Current version as of 26 March 2003.
Not to be distributed/networked. If you need multi-user/network access visit www.bsigroup.com/license.

6.5 Ground gases

The insertion of a ground barrier for the prevention of radon, methane and other ground gases and contaminants from entering a structure should be considered in the design, choice of the materials and installation of any waterproofing system.

NOTE 1 Attention is drawn to the Building Regulations [3]. Further guidance on the characterization and remediation of ground gases is given in BS 8485.

NOTE 2 The maps of areas where basic or full protection against radon needs to be provided are contained in the Building Research Establishment (BRE) reports BR211 [4], BR376 [5], BR413 [6] and the Health Protection Agency (HPA) document Radon in Dwellings in Scotland: 2008 Review and Atlas *[7].* [1)]

7 General construction issues

7.1 Site de-watering

Where appropriate, the site should be de-watered at least until such time as the below ground structure and waterproofing is completed (see **6.4** regarding the effects of dewatering on nearby structures).

On open sites, where any adjacent structures are sufficiently remote to be unaffected by groundwater lowering, de-watering or pumping from carefully arranged sumps with appropriate drainage channels should be continuous while the laying of any waterproofing barrier materials is in progress and until all loading coats have hardened and the structure has developed sufficient strength to resist the full water pressure.

7.2 Structural elements

Forms of construction to receive below ground waterproofing protection may include the following.

a) Walls – constructed from:
   1) masonry (plain or reinforced brick or block);
   2) precast concrete;
   3) in-situ concrete, either cast in form (plain, reinforced or prestressed) or embedded walls; or
   4) steel or concrete piles in embedded walls.

b) Base slab – constructed from concrete cast in situ, plain or reinforced, raft or other form.

c) Roof, where applicable – constructed from reinforced in-situ concrete, precast concrete with an in-situ topping, or a steel composite slab, as appropriate.

   *NOTE 1 For structures cast entirely below ground, or where the substructure extends beyond the superstructure, the roof slab requires protection against water ingress (see **6.2.1**).*

*NOTE 2 Further guidance on construction methods for each type of waterproofing protection is given in Clause **8**, Clause **9** and Clause **10**.*

---

1) Alternatively, a radon report can be obtained online from http://www.ukradon.org.

Licensed by Maslic Asphalt Council.Malcolm Grinstead . Current version as of 26 March 2003.
Not to be distributed/networked. If you need multi-user/network access visit www.bsigroup.com/license.

8 Type A (barrier) protection

8.1 Structural aspects

*COMMENTARY ON **8.1***
*Structures using Type A protection are normally constructed of concrete or masonry. Deeper structures are of concrete construction. Steel can also form part of the construction as temporary sheet piling. Consideration might be given to employing the sheet pile wall as an element of the waterproofing system (see Clause **9**).*

Schematic illustrations of Type A protection are given in Figure 2a).

8.1.1 General

Barrier protection design should be based on an evaluation of:

a) the nature of the substrate(s);

b) the likely overall and local movements that might cause distress in the waterproofing barrier;

c) the ability of the barrier system to accommodate these movements;

d) the essential characteristics of the waterproofing system, e.g. bonded/unbonded, pre-applied/post-applied, liquid-applied or pre-formed;

e) the need for external or internal application;

f) the effects of environmental contaminants.

8.1.2 Differential movement and cracking

Barrier-specific properties should also be evaluated, allowing for any predicted cracking from the structure. The waterproofing barrier should be capable of providing the appropriate protection against water and water vapour without disruption or decay.

Although some barrier materials accept local strains and can accommodate a crack opening in the supporting structure, it should be noted that others might be damaged by differential movement or cracking (see Figure 4).

Care should be taken so that a load-bearing substrate is capable of supporting the barrier material, even under sustained water pressure, particularly around openings or service penetrations. A levelling or smoothing layer should be applied to masonry structures, as required.

NOTE There are two issues in regard to the possible influence of cracks on barrier performance. One relates to cracks pre-existing at the time of application and the ability of the selected system to initially bridge the crack. Decisions based on the specific properties of the barrier material would be needed before deciding whether any such cracks require pre-treatment. The second issue is the ability of the selected system to accommodate cracks that might form after application.

Remedial measures to fill significant voids or openings should be undertaken as the effect of sustained water pressure forcing the barrier material into them might create a risk of failure.

Licensed by Mastic Asphalt Council.Malcolm Grinstead . Current version as of 26 March 2003.
Not to be distributed/networked. If you need multi-user/network access visit www.bsigroup.com/license.

Figure 4 **Effect of structure on applied waterproofing barrier**

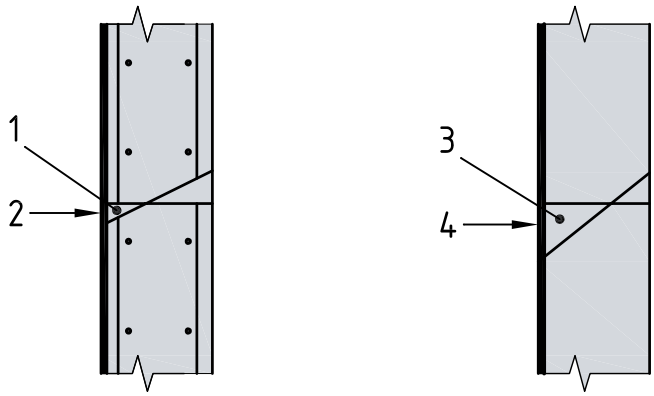

a) Reinforced (in-situ concrete/masonry) wall

b) Unreinforced or nominally reinforced (in-situ concrete/masonry) wall

Key

1 Stress and crack width reduced by reinforcement

2 Likely to be compatible with most waterproofing barriers

3 Stress and crack width increased by lack of reinforcement

4 Might exceed strain capacity of some waterproofing barriers if wall cracks

8.1.3 Continuity of waterproofing barrier

The waterproofing barrier should, in most instances, be continuous around the structure (see **6.2.4**). In order to maintain the continuity of the barrier, penetrations through walls or floors that are to be protected (e.g. openings for services, pipes, cables) should be avoided, wherever possible. Where it is essential to provide such openings, special treatment around the penetration should be provided and reference should be made to the manufacturer's instructions and specialist advice. Similarly, where fixings through the barrier are necessary, the manufacturer's instructions should be followed.

Movement joints below ground should not be used unless unavoidable; in such cases these should be waterproofed in accordance with the manufacturer's instructions.

Where a waterproofing barrier is required for a structure supported on piled foundations, special consideration should be given to the detailing so that structural continuity is not compromised (see Figure 5) and reference should be made to the manufacturer's instructions.

Licensed by Maslic Asphalt Council.Malcolm Grinstead. Current version as of 26 March 2003.
Not to be distributed/networked. If you need multi-user/network access visit www.bsigroup.com/license.

Figure 5 **Pile to floor slab junction**

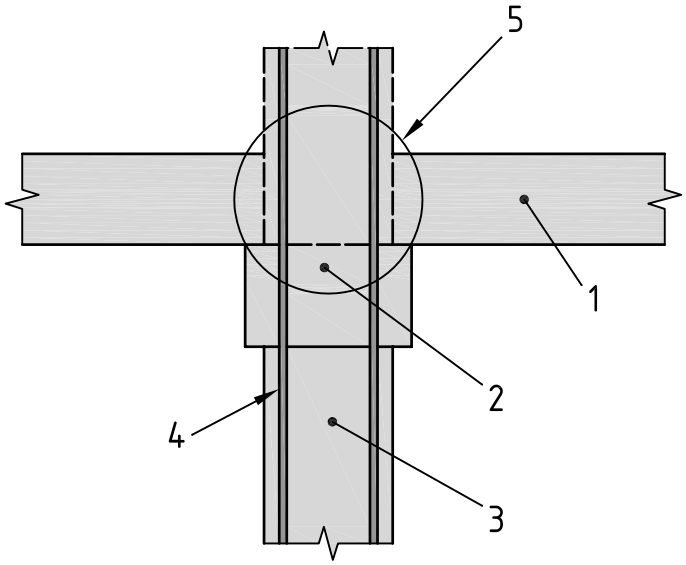

Key

1 Floor slab
2 Pile cap, as appropriate
3 Pile
4 Pile reinforcement
5 Slab/pile/pile cap to have integral protection and/or added internal or external membrane (catering for reinforcement; see **8.1.3**)

8.2 Waterproofing barrier materials

8.2.1 General

The waterproofing barrier used to provide Type A protection should be installed in one of the following locations, depending on the material(s) from which it is formed:

a) on the exterior face of walls or slabs (external waterproofing);

b) on some external source of support (reverse waterproofing);

c) within the structure (sandwiched waterproofing);

d) on the interior face of perimeter walls (internal waterproofing).

Table 3 should be considered when selecting the appropriate waterproofing barrier for use.

All barriers should be installed strictly in accordance with the manufacturer's instructions, including any recommendations regarding:

1) protection from damage, following application and curing, where the barrier is applied externally;

2) penetrations through the barrier;

3) fixings, where these are necessary;

4) application over joints in the substrate.

Licensed by Maslic Asphalt Council,Malcolm Grinstead . Current version as of 26 March 2003.
Not to be distributed/networked. If you need multi-user/network access visit www.bsigroup.com/license.

Table 3 **Categories of barrier materials**

Type of barrier	Description	Relevant standard(s)	Application [A)]
Bonded sheet membranes (see **8.2.2**)	Bitumen-based, sheet membranes can be either: a) cold-applied (self-adhesive); or b) hot applied ("torch-on" or bonded using a hot melt bitumen adhesive).	BS 743:1970, Class A; or BS 8747	Can be applied externally or sandwiched.
	Composite sheet membranes.		Can be applied externally or sandwiched.
Liquid applied membranes (see **8.2.3**)	There are many types of liquid applied membranes, which include one or two part systems.	—	Can be applied externally or sandwiched.
Geosynthetic (bentonite) clay liners (see **8.2.4**)	These comprise bentonite with a single or dual 'carrier' material, typically of geotextile or high-density polyethylene. There are two principal forms: dry bentonite and pre-hydrated bentonite.	—	Can be applied externally or sandwiched.
Mastic asphalt membranes (see **8.2.5**)	These are applied in three coats as a hot liquid.	BS EN 12970	Can be applied externally or sandwiched.
Cementitious crystallization slurries and powders (see **8.2.6**)	These are applied as coatings to surfaces of concrete walls and slabs or a solution or powder added to concrete.	—	Can be applied internally or externally.
Cementitious multi-coat renders, toppings and coatings (see **8.2.7**)	These are generally applied in multi-coats or slurries and are resistant to liquid water but allow some water vapour penetration.	—	Can be applied internally or externally.

[A)] See Figure 2a) and Figure 6.

Figure 6 **Effect of bonded or partially bonded barriers**

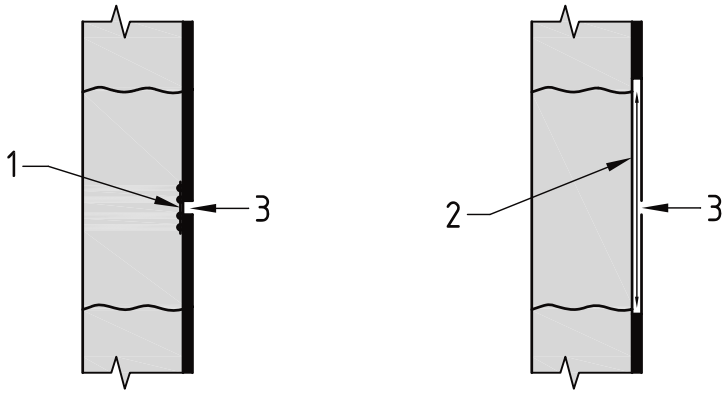

Key

1 Bonded barrier preventing water from tracking from a defect in the membrane to a crack/joint in the supporting concrete wall

NOTE If the defect is coincident with a crack, the crack can be repaired with crack injection.

2 Partially bonded barrier allowing water to track from a defect

3 Defect in barrier

Licensed by Mastic Asphalt Council.Malcolm Grinstead . Current version as of 26 March 2003.
Not to be distributed/networked. If you need multi-user/network access visit www.bsigroup.com/license.

8.2.2 Bonded sheet membranes

*COMMENTARY ON **8.2.2***
Bonded sheet membranes may be pre- or post-applied to the structure. Pre-applied membranes are initially attached to enabling works in a reverse waterproofing application; they subsequently become bonded to poured concrete walls and slabs.

A bonded sheet membrane should be firmly supported by a load-bearing structure so that external ground and water pressures are adequately resisted.

It is important that the substructure provides a satisfactory base on which to apply the membrane, and therefore concrete should be free from ridges and indentions and finished to a true and even surface, preferably with a wood float finish. Brickwork and blockwork should have flush joints.

8.2.3 Liquid applied membranes

8.2.3.1 General

Details on the preparation of the substrate, application rate, method and curing requirements should be sought from the manufacturer.

8.2.3.2 Sandwich applications

When applied to the internal face of the structure, the membrane might need to be restrained against the effects of water pressure; in such cases, the restraining element should be firm against the applied liquid membrane.

Suitable protection to the membrane should be provided.

8.2.4 Geosynthetic clay liners

*COMMENTARY ON **8.2.4***
Bentonite is a natural clay mineral, which has the capacity to expand when in contact with water forming a barrier to the transmission of water and other liquids. Bentonite is held between two geosynthetic layers. The bentonite forms an impervious seal and bonds to the concrete surface.

Geosynthetic clay liners are available in two forms. Dry bentonite liners rely on activation taking place on site from the absorption of the groundwater once installed. Pre-hydrated bentonite liners are manufactured by vacuum extrusion and do not need to be hydrated on site.

8.2.4.1 General

Bentonite-based waterproofing should only be used where the liner remains confined between two surfaces and cannot be left exposed.

NOTE The materials are suitable for new-build and refurbishment applications.

8.2.4.2 Horizontal applications

Geosynthetic clay liners can be laid onto compacted sub-base or blinding concrete. The surface can be damp, but the liner should not be laid into standing water. The manufacturer's advice should be sought on surface preparation requirements.

Licensed by Maslic Asphalt Council,Malcolm Grinstead . Current version as of 26 March 2003.
Not to be distributed/networked. If you need multi-user/network access visit www.bsigroup.com/license.

The manufacturer should also be consulted regarding the continuity of the horizontal liner with the vertical liner as different options exist depending on the type of vertical application, i.e. pre-applied (see **8.2.4.3**) or post-applied (see **8.2.4.4**).

8.2.4.3 Vertical applications (pre-applied)

When pre-applied, the liner should be fixed to formwork or to secant, contiguous or steel piles or diaphragm walls and the concrete should be poured directly, confining the liner.

8.2.4.4 Vertical applications (post-applied)

When post-applied, the liner should be nailed to the reinforced concrete structure. Minimal substrate preparation is required. As soon as possible after the vertical bentonite sheeting has been applied to the walls, backfilling should take place in accordance with the manufacturer's instructions.

8.2.5 Mastic asphalt membranes

*COMMENTARY ON **8.2.5***
Mastic asphalt is composed of graded mineral matter and asphaltic cement in such proportions as to form a coherent, voidless, impermeable mass, solid or semi-solid under normal conditions but sufficiently fluid when brought to a suitable temperature to be spread by means of a hand float or by mechanical means.

Mastic asphalt should always be applied in three coats. Horizontal surfaces to which mastic asphalt is to be applied should be level and free from irregularities.

Brickwork and concrete surfaces formed using timber shuttering are usually sufficiently rough to provide a key for vertical asphalt; however, smooth surfaces do not give an adequate key so, if these cannot be avoided, technical advice should be sought on the appropriate treatment.

When mastic asphalt is not fully confined, the maximum design load should not exceed that stated by the manufacturer to prevent extrusion.

8.2.6 Cementitious crystallization slurries and powders

*COMMENTARY ON **8.2.6***
Cementitious crystallization barriers are blends of Portland cement, treated quartz sands and active chemicals. They are supplied in powder form and are mixed with water to form a slurry, which is then applied directly to the prepared concrete surface.

The active chemicals combine with free lime and moisture present in the capillary tracts to form insoluble crystalline complexes which prevent water ingress.

8.2.6.1 General

Cementitious crystallization barriers should be applied to either internal or external surfaces of the concrete structure by brush or spray. They are suitable for use on both new and existing structures, and do not require a loading coat.

Licensed by Mastic Asphalt Council.Malcolm Grinstead . Current version as of 26 March 2003.
Not to be distributed/networked. If you need multi-user/network access visit www.bsigroup.com/license.

Surfaces should be prepared (in accordance with the manufacturer's instructions) so as to have a capillary open structure prior to the application of the barrier.

NOTE A capillary open structure refers to the intrinsic fine capillary tracts (pore structure) of a concrete matrix.

8.2.6.2 Horizontal applications

Cementitious crystallization barriers can be applied as a single coat slurry to hardened concrete or dry sprinkle and trowel-applied to fresh concrete.

They can also be applied to concrete blinding immediately prior to the placing of overlaying concrete.

8.2.6.3 Vertical applications

The barrier should be applied in a two-coat application to all vertical surfaces. Vertical surfaces should be prepared in accordance with the manufacturer's instructions.

8.2.7 Cementitious multi-coat renders, mortars and coatings

The installation of cementitious multi-coat renders, mortars and coatings should, unless otherwise advised by the manufacturer, be left until as much as practicable of the structure's dead load has been applied.

The substrate should be prepared in accordance with the manufacturer's instructions prior to the application of the system.

Details on the application method and rate, mixing, number of layers/coats and curing requirements should be sought from the manufacturer.

Existing substrates and structural elements should be assessed for suitability to withstand any increase in applied loads from water pressure.

9 Type B (structurally integral) protection

9.1 General

NOTE For water and water vapour resistance, Type B protection relies upon the design and the materials incorporated into the external shell of the structure itself.

Schematic illustrations of Type B protection are given in Figure 2b).

Structures providing Type B protection should be constructed of reinforced concrete or structural steel and designed in accordance with the relevant part of BS EN 1992 or BS EN 1993 respectively.

Concrete structures containing a waterproof admixture should be considered as having a lower degree of water/vapour transmission when the design of the concrete mix and casting of the structure is adequately supervised and the admixture is assessed and certified (see **9.2.1.3**).

Service entries are particularly vulnerable to water penetration; where they cannot be avoided, they should be carefully detailed, incorporating sealing, to minimize the risk of water ingress.

Licensed by Maslic Asphalt Council,Malcolm Grinstead . Current version as of 26 March 2003.
Not to be distributed/networked. If you need multi-user/network access visit www.bsigroup.com/license.

9.2 Materials for structurally integral protection

9.2.1 Concrete

9.2.1.1 General

NOTE 1 Reinforced concrete structures may be designed and detailed specifically to minimize water ingress with no additional protective measures. Concretes meeting minimum design requirements for structural use and durability in the ground, and properly placed and compacted, are likely to have good resistance to the transmission of water in liquid form. A degree of resistance to water vapour transmission is also achieved dependent on section thickness.

The pattern of any seepage encountered is often associated with poor joints, cracks or other discontinuities such as service penetrations.

The following factors are considered as being of particular importance in achieving a water-resistant concrete structure and thus should be taken into account:

a) the design of the structure (general and detailed), and the specification of materials;

b) the quality of workmanship in preparing and placing concrete;

c) curing;

d) site organization;

e) the condition of the formation, i.e. the formation should be clean with no running water;

f) material storage;

g) the close-fitting of formwork, the fixing of reinforcement(s) and the preparation of joints.

Crack widths in concrete should be controlled by using the appropriate design, mix specification, detailing, construction supervision and curing (especially in relation to temperature).

NOTE 2 For guidance on limiting crack widths, see BS EN 1992 and CIRIA publication C660 [8].

The effects of residual moisture ingress (water or water vapour) may be minimized by the provision of appropriate internal environmental design and control mechanisms.

When selecting applied internal finishes, advice should be sought from the manufacturer. Moisture content and relative humidity should also be considered in accordance with BS 8204-1.

9.2.1.2 Reinforced and prestressed concrete (in-situ or precast)

Structures in reinforced or prestressed concrete should be designed and constructed in accordance with BS EN 1992.

9.2.1.3 Concrete containing waterproofing admixtures

*COMMENTARY ON **9.2.1.3***
There is a range of products, generally categorized as waterproofing admixtures, which seek different ways to increase the inherent resistance of concrete to water and water vapour. As the mechanisms used by each product to achieve these aims are quite diverse, it is not possible in this British Standard to give specific guidance on their use.

Waterproofing admixtures are specified in BS EN 934.

Licensed by Mastic Asphalt Council.Malcolm Grinstead . Current version as of 26 March 2003.
Not to be distributed/networked. If you need multi-user/network access visit www.bsigroup.com/license.

Manufacturers should be consulted as to the performance of a specific waterproofing admixture in reducing the risk of water penetration through a crack, possibly under considerable hydrostatic pressure. Potential seepage locations, such as penetrations and joints, would typically be addressed by design (e.g. waterstops; see **9.2.1.4**).

Where the waterproofing admixture has been assessed and certified by a UKAS-accredited body or a European Technical Approval body, certification information should be referred to for guidance on use and the extent or limitation of technical benefit.

Waterproofing admixtures should be used in conjunction with other waterproofing components supplied by the same manufacturer, e.g. waterstops, sealants.

9.2.1.4 Waterstops

*COMMENTARY ON **9.2.1.4***
The principal types of waterstops can be classified as the following.

a) Passive sections:

1) rubber or flexible polyvinyl chloride (PVC) extruded profiles cast into the concrete on both sides of the joint, either at the concrete surface or mid-depth of the concrete section, to form a physical obstruction to water transmission;

2) steel water bar strips placed mid-depth of the concrete section to form a physical obstruction to water transmission.

b) Active or hydrophilic strips or crystallization slurries:

1) preformed profiles of materials or sealant composition applied to the concrete joint at depth in the section. The materials swell or give rise to crystal growth on contact with water providing an enhanced obstruction. They can used as a sole material or in a composite product with passive waterstop sections;

2) post-injected systems.

c) Permeable hose or other sections that are fixed to the construction joint surface before casting the second pour, to facilitate the injection of a specialist sealing resin into the joint, when required.

Waterstops should be used to provide enhanced resistance to water transmission at joints in the concrete structure, e.g. at construction or day-work joints, services or other penetrations (see Figure 2). The positioning of the waterstop(s) (external and/or internal) should be appropriate for the method of construction and the level of risk. Particular attention should be given to the use of waterstops at movement joints (see **8.1.3**).

The specifier should be satisfied that waterstops have been tested and certified for the application, service conditions and groundwater chemistry proposed.

Where centre-bulb waterstops are used, robust methods of fixing should be used to keep the components in place during concreting operations. Correct orientation should be provided to facilitate adequate compaction of the concrete around any internal components and to avoid creating paths for subsequent water ingress.

Licensed by Mastic Asphalt Council.Malcolm Grinstead . Current version as of 26 March 2003.
Not to be distributed/networked. If you need multi-user/network access visit www.bsigroup.com/license.

9.2.2 Steel

Steel piles in either sheet or tubular form may be used as the permanent structural wall in cases where the pile clutch interlock system between individual sections can be adequately sealed. Soldier piles formed from H or I sections may also be used with suitable lagging.

Steel structures should be designed and constructed in accordance with BS EN 1993-5.

Sections should be formed of structural steel of a weldable grade conforming to the following standards, as relevant:

a) BS EN 10248 for hot rolled steel sheet piles;

b) BS EN 10249 for cold formed steel sheet piles;

c) BS EN 10210 for hot finished hollow sections; or

d) BS EN 10219 for cold finished hollow sections.

NOTE BS EN 10248 also covers special interlock sections, which are produced to allow hollow sections to be connected together or to intermediate sheet piles.

9.3 Embedded retaining walls

9.3.1 General

Construction for deep structures may be either top down or bottom up, or a combination thereof. The construction method should, as dictated by the ground conditions and site constraints (including the proximity of buildings on adjacent sites), determine the use and type of embedded piled walls, which may be of concrete or steel pile, or diaphragm walls.

For all types of embedded retaining wall, the requirements for water resistance should be clearly specified, e.g. by using the ICE's *Specification for piling and embedded retaining walls* [1] or equivalent guidance. In particular, the acceptability of running or dripping water (seepage) and the extent to which any damp areas are tolerable should be considered and specified, as appropriate for the required grade of waterproofing protection (see **6.2.3**).

NOTE 1 Embedded retaining walls provide a degree of integral protection, although the number of joints and difficulties controlling their construction can lead to a risk of a greater quantity of water penetration, compared with a cast in form wall, and this needs to be allowed for in the overall design strategy.

For all embedded retaining walls, whether concrete or steel, the joint between the base slab and the wall should be precisely detailed to achieve structural continuity consistent with the design. This junction should be viewed as a three-dimensional arrangement (see also **4.3.1**), such that all potential water paths can be identified and detailed. The joint should be carefully detailed and waterstops should be attached to, and follow, the profile of the wall in accordance with the manufacturer's instructions.

*NOTE 2 Grouting tubes may also be installed within a clean flush joint so that remedial grouting can be undertaken, if necessary. Attempts to install grout tubes that maintain intimate contact with convoluted joints might be unsuccessful; in this situation, a hydrophilic strip bonded to the joint with adhesive might be more suitable (see also Clause **11**).*

Licensed by Maslic Asphalt Council,Malcolm Grinstead . Current version as of 26 March 2003.
Not to be distributed/networked. If you need multi-user/network access visit www.bsigroup.com/license.

9.3.2 Concrete retaining walls

Piled and diaphragm retaining walls should conform to the general requirements of BS EN 1992.

NOTE 1 The water penetration through well-formed walls using these techniques is normally limited to, and controlled by, the vertical joints rather than the flow through the concrete elements and there is thus little benefit in designing concrete piled and diaphragm walls in accordance with the higher tightness classes specified in BS EN 1992-3.

Where secant pile retaining walls are used, specialist advice should be obtained as to the appropriate system and construction method for the project.

NOTE 2 The joints between diaphragm wall panels can be enhanced by the incorporation of water bars, where the performance requirements justify it. Such water bars can be effective at restricting water ingress via transverse flow through the wall section but further attention might be necessary to deal with water flowing up the wall joints inboard of the water bar location.

9.3.3 Steel retaining walls

The performance level of water tightness should be specified. This may be achieved by the application of an appropriate sealing system(s) to the clutch interlocks, using one of the following systems:

a) active (hydrophilic) systems, pre-applied or, if essential, applied under shelter and tightly controlled conditions on site; or

b) passive (hot-installed bituminous product) systems; or

c) welded clutches.

The system selected should be able to provide the specified performance and be consistent with the method of installing the piles.

The manufacturer's instructions should be followed to achieve the necessary resistance to seepage.

NOTE 1 In some instances, welded clutches might be used in addition to the systems specified in a) and b).

For integral protection, sheet pile interlocks should be welded or sealed with a hydrophilic material in accordance with BS EN 12063. Sealing welds along the interlock should be capable of accommodating any movement that might take place. The welding process should be selected to suit the environment to which the welds are exposed and the site conditions in which welding occurs.

NOTE 2 Steel sheet pile interlocks can be seal-welded after installation to provide watertight structural walls.

The connection to the base slab should cater for any uplift forces in addition to providing a robust barrier to water ingress. Horizontal sealants should be provided at the junction between the base slab and the perimeter wall using active or passive methods.

Where possible, sheet piles should be shop-welded and subsequently driven in sets of two or three, thus reducing the extent of site welding required. If welding is undertaken on site, only the exposed length of the sheet piles is treated. Appropriate working conditions need to be provided and the piles should be driven within acceptable deviations to form the joint.

Licensed by Mastic Asphalt Council.Malcolm Grinstead . Current version as of 26 March 2003.
Not to be distributed/networked. If you need multi-user/network access visit www.bsigroup.com/license.

NOTE 3 Failure to prepare the surfaces appropriately increases the risk of porosity in the welds, with reduction in the degree of water resistance over time.

NOTE 4 Guidance on welding is given in BS EN 1011 and BS EN ISO 15614-1. Further guidance is also given in the ICE's Specification for piling and embedded retaining walls *[1] and BS EN 1993-5.*

10 Type C (drained) protection

*COMMENTARY ON CLAUSE **10***
Type C waterproofing protection manages water that penetrates the external shell of a structure, by collecting it in a cavity formed between the external wall and an internal lining/wall. There is permanent reliance on this cavity to collect groundwater seepage and direct it to a suitable discharge point, e.g. drains or a sump for removal by gravity drainage or mechanical pumping.

*New construction generally incorporates a cavity drain membrane. However, the use of other products and techniques, such as drained voids constructed in masonry, can also be considered. Traditionally, the cavity in floor construction has been formed by the use of either no-fines concrete or ceramic tile systems. These are rarely used in new construction, but might be encountered when refurbishing existing structures (see **5.2.3**).*

Schematic illustrations of Type C protection are given in Figure 2c).

10.1 Structural aspects

The outer leaf of the exterior wall should be capable of controlling the quantity of water that can pass through it, in order not to exceed the drainage capacity of the system. Water entering a drained cavity system is regulated by the structure, so defects that might result in unacceptable leaks should be remedied before the system is installed.

10.2 Cavity drain systems

NOTE Cavity drain systems do not change the loadings due to water on an existing structure, other than where remedial measures are taken to control water ingress.

10.2.1 Cavity drain systems with membranes

10.2.1.1 Cavity drain membranes

NOTE Where cavity drain membranes are used, the membrane forms a permanent cavity between the external elements of the structure and the internal wall/floor finishes. Such cavities vary in width, depending on the stud height or profile of the membrane, but are usually up to 20 mm.

Cavity drain membranes should be used in accordance with the manufacturer's instructions. In particular, the stud height or profile of the membrane should be selected in conjunction with the manufacturer's data and after considering the external hydrostatic pressure, the porosity of the structure and the predicted rates of water ingress though the structure's external fabric.

Cavity drain membranes can be used on surfaces that have been contaminated with impurities. However, in these situations, consultation should be undertaken with the local environmental agency regarding discharge from the system.

Licensed by Maslic Asphalt Council,Malcolm Grinstead . Current version as of 26 March 2003.
Not to be distributed/networked. If you need multi-user/network access visit www.bsigroup.com/license.

Before a cavity drain membrane is laid or fitted on walls and floors constructed of new concrete, the concrete surface should be treated to reduce the risk of leaching of free lime or mineral salts and to avoid the obstruction of the drainage system.

10.2.1.2 Floor cavities

Where the floor cavity incorporates perimeter channels that discharge into a sump(s), both the channels and the sump(s) should be cleaned before, during and after installation of the membrane to allow uninterrupted drainage (see also **10.3**).

Before the cavity drain membrane is laid:

a) the floor should be flood tested to confirm that all water runs freely to the points of collection; and

b) the base slab should be cleaned to remove all debris that might cause blockages.

Sections of the membrane(s) laid across the floor should be jointed and sealed.

Once laid, the membrane should be protected against damage caused by following trades.

The membrane should be inspected for damage and any defects should be remedied before floor finishes are applied.

NOTE The cavity drain membrane may be covered with a variety of floor finishes dependent on the design requirements of the structure.

10.2.1.3 Wall cavities

The wall cavity should be constructed so that it remains free draining at all times.

Where the wall cavity incorporates perimeter channels that work in conjunction with a drained floor cavity, the drainage, which is common to walls and floors, should conform to **10.2.1.2**.

Before the cavity drain membrane is fitted, in situations where the cavity is to be constructed or installed over existing walls, all wall coverings that might decay, or become loose or friable, should be removed.

NOTE 1 If they are not removed, such wall coverings can cause the blockage of the cavity or drainage channels and impede free drainage.

Sections of the membrane(s) fitted to the walls should be jointed and sealed ensuring adequate laps.

NOTE 2 The cavity drain membrane may be covered with a variety of wall finishes dependent on the design requirements of the structure.

10.2.2 Cavity drain systems without membranes

Where a drained cavity is formed by a masonry cavity wall, the inner leaf should be either built off a concrete upstand, constructed integrally with the slab, or built of engineering bricks to a minimum of 150 mm above channel level.

Materials should be selected which are appropriate to the environment on both faces.

Licensed by Mastic Asphalt Council.Malcolm Grinstead . Current version as of 26 March 2003.
Not to be distributed/networked. If you need multi-user/network access visit www.bsigroup.com/license.

Where the cavity is constructed against an embedded retaining wall, allowance should be made for the permitted construction tolerances, in order to maintain the necessary channel width.

Care should be taken during construction to keep the cavity clear of debris and mortar droppings.

In order to allow free drainage from the channel and access for maintenance, it is recommended that this channel is laid nominally level but with adequate access points for maintenance through the inner leaf of the cavity wall. Where possible, the drainage channel should be formed within the depth of the slab. Where this cannot be achieved, the detailing should be such that water cannot migrate from the cavity across the slab.

A drained cavity to the roof should be considered either as part of the base construction or, where necessary, as part of the remedial measures.

10.2.3 Cavity ventilation

It is not usually advisable to ventilate the cavity; however, it might be necessary in certain circumstances, such as where there is a potential for radon, methane or other ground gases and contaminants to be present. In these circumstances, specialist advice should be sought during the design phase.

10.3 Maintenance and commissioning

10.3.1 Design

In order to maximize the long-term integrity and effectiveness of a waterproofing system incorporating Type C protection, the waterproofing system should be designed to be maintainable.

Access points that allow routine maintenance of channels and outlets should be incorporated into the design of the waterproofing system.

10.3.2 Installation and inspection

Immediately after the installation of a cavity drain system, drainage channels and sumps should be cleared out and tested. Pumping devices should be checked, tested and fully commissioned in accordance with the manufacturer's instructions.

NOTE In circumstances where pumps are running for long periods of time, or where the system is subject to silting or the deposition of free lime, more frequent servicing might be necessary.

The servicing requirements for the waterproofing system should be clearly set out in the documentation supplied by the designer to the client, including the need for regular planned maintenance of the drainage and/or pumping systems not less than once a year.

The client should be informed that any failure to adhere to the maintenance schedule could result in a failure of the waterproofing system.

Licensed by Mastic Asphalt Council.Malcolm Grinstead . Current version as of 26 March 2003.
Not to be distributed/networked. If you need multi-user/network access visit www.bsigroup.com/license.

11 Remedial measures

11.1 General

NOTE There are many causes of seepage in new and existing structures, principally poor design and/or specification, defective materials, defective workmanship, deterioration of the structure, or a change in the external environment (e.g. rising groundwater or locally leaking sewers or water mains). Adjacent construction works can also affect the pattern of groundwater flow and surface water run-off. A number of these factors can also combine to cause problems.

Before any remedial action is taken, defects should be diagnosed to determine the cause and extent of failure. The correct diagnosis of the fault is of vital importance, to establish whether faults exist with the system as a whole, or whether faults are localized (see also **5.2**).

Where remedial work is required, the following measures should be considered:

a) the installation of a tanking system or a drained cavity;

b) the installation of external drainage; or

c) localized works to the fabric of the structure, such as:

   1) pressure or vacuum grouting (see **11.2**);

   2) crack sealing with resin or cementitious mortar (see **11.3**);

   3) crack filling by pressure or vacuum injection (see **11.4**);

   4) the replacement of locally defective material (see **11.5**).

These should be considered irrespective of whether planned remedial treatment has been included as a contingency measure in new construction or for maintaining or improving the internal environment of an existing structure.

Repairs to concrete should be carried out in accordance with the relevant part(s) of BS EN 1504.

*COMMENTARY ON **11.1***
If the location of a defect in an existing external membrane can be established, it is possible in some instances, where access is not a problem, to expose the membrane and carry out repairs by excavating locally, adjacent to the walls of the structure.

Where the internal membrane is fully bonded to the substrate, the defect is generally located at the position where dampness or seepage occurs. Once the internal finish has been removed to reveal the defect, the membrane can be locally repaired using compatible materials.

Where the internal membrane is only partially bonded to the substrate, the defect might be more difficult to locate. Even if the defect can be found, further migration to other defects can follow. In such cases, consideration needs to be given to removing and replacing the entire membrane with a new bonded system.

Locating defects in a sandwich system can be particularly problematic and localized repair is seldom viable.

*Where access is not feasible, grouting in accordance with **11.2** and **11.4** ought to be considered.*

Licensed by Maslic Asphalt Council,Malcolm Grinstead . Current version as of 26 March 2003.
Not to be distributed/networked. If you need multi-user/network access visit www.bsigroup.com/license.

11.2 Pressure or vacuum grouting

Grouting to cut off seepage might repair isolated defects. However, it should be noted that, where a large number of defects occur, it is more effective to prevent water ingress by other methods.

There are a number of grouting materials available for use based on:

a) cement;

b) bentonite;

c) chemical (e.g. acrylic);

d) resin (e.g. epoxide, polyester and non-expansive polyurethane);

e) expansive polyurethane;

f) modified rubber latex.

Holes should be drilled through the walls and floor of the structure adjacent to the defect (sometimes inclined to intersect seepage paths) and the pressure or vacuum grout should be driven into the material behind to gel and seal the leak. As grout selection and application are specialized techniques, advice should be sought from manufacturers and experienced applicators prior to use.

NOTE Often more than one phase of grouting is needed as the seepage might be moved to defects elsewhere in the structure or higher up in the walls.

Care should be taken when grouting larger areas to avoid blocking any external drainage systems.

11.3 Crack sealing with resin or cementitious mortar

Where structural continuity is not required and there is no hydrostatic pressure against the adhesion of the repair, cement grout, neat cement grout or low viscosity latex emulsion should be brushed into cracks and porous areas to seal them against water ingress.

Suitable materials include:

a) cementitious slurry;

b) cement/silica-fume slurry;

c) polymer-modified cementitious slurry;

d) polymer resin;

e) cementitious crystallization systems;

f) epoxide putty.

11.4 Crack filling by pressure or vacuum injection

Pressure or vacuum injection can be used to fill and seal cracks and joints, particularly at kickers where a waterstop has become displaced and cutting out and replacement is not practical.

NOTE 1 Porous areas of concrete can sometimes be injected successfully, but severe honeycombing might require the defect to be cut out and replaced.

NOTE 2 Injection techniques have been used to seal very fine cracks.

Licensed by Maslic Asphalt Council,Malcolm Grinstead . Current version as of 26 March 2003.
Not to be distributed/networked. If you need multi-user/network access visit www.bsigroup.com/license.

The selection of grout systems should take into account:

a) the likelihood of structural movement;

b) the nature and size of the defect;

c) the moisture content of the substrate;

d) the temperature of the structure;

e) the injection method to be used.

Where the wall or floor is expected to remain damp, a water-tolerant grout should be used. Suitable materials include:

1) epoxy resin;

2) polyurethane resin;

3) acrylic resin;

4) polyester resin;

5) styrene-butadiene rubber (SBR) and acrylic emulsions;

6) polymer-modified cementitious grouts.

11.5 Replacement of locally defective material

NOTE 1 Where a relatively small number of well-separated defects in the walls or floors result in seepage (e.g. poorly compacted concrete), adequate repairs can be achieved by cutting out and replacing the defective area. Achieving a water-resistant joint between the substrate concrete and the repair material is the most critical feature of this method. The installation of temporary drainage points, in the area to be repaired, might be necessary in some situations to control the seepage. However, some repair materials are formulated for application where running water is present.

NOTE 2 Surface preparation and the compatibility of the physical and chemical properties of the repair material are important. Many types of repair materials are available, including:

a) concrete compatible with that used in the original construction;

b) polymer-modified cementitious mortars and concrete;

c) polymer-based mortars;

d) sprayed concrete.

The properties of the repair material should be selected to match the substrate as closely as possible, particularly the shrinkage and thermal behaviour. Specialist advice should be obtained to select the most suitable concrete repair system and to specify the required performance of the material to suit the size, depth and location of the area to be repaired.

Where proprietary mortars or concretes are used, they should be applied in accordance with the manufacturer's instructions, and any repair should be undertaken by experienced contractors.

Licensed by Mastic Asphalt Council.Malcolm Grinstead . Current version as of 26 March 2003.
Not to be distributed/networked. If you need multi-user/network access visit www.bsigroup.com/license.

Bibliography

Standards publications

For dated references, only the edition cited applies. For undated references, the latest edition of the referenced document (including any amendments) applies.

BS 5454, *Recommendations for the storage and exhibition of archival documents*

BS 8485, *Code of practice for the characterization and remediation from ground gas in affected developments*

BS EN 934, *Admixtures for concrete, mortar and grout*

BS EN 752, *Drain and sewer systems outside buildings*

BS EN 1011, *Welding – Recommendations for welding of metallic materials*

BS EN 1992-3, *Eurocode 2: Design of concrete structures – Part 3: Liquid retaining and containment structures*

BS EN ISO 15614-1, *Specification and qualification of welding procedures for metallic materials – Welding procedure test – Part 1: Arc and gas welding of steels and arc welding of nickel and nickel alloys*

Other publications

[1] INSTITUTE OF CIVIL ENGINEERS. *Specification for piling and embedded retaining walls*. Second edition. London: Thomas Telford Publishing, 2007.

[2] GABA, A.R., SIMPSON, B., POWRIE, R. AND BEADMAN, D.R. *Embedded retaining walls – Guidance for economic design*. C580. London: CIRIA, 2003.

[3] GREAT BRITAIN. Building Regulations 2000 and subsequent amendments. London: The Stationery Office.

GREAT BRITAIN. Building (Scotland) Regulations 2004, as amended. Edinburgh: The Stationery Office.

GREAT BRITAIN. Building Regulations (Northern Ireland) 2000, as amended. London: The Stationery Office.

[4] BUILDING RESEARCH ESTABLISHMENT. *Radon – Guidance on protective measures for new buildings*. BR211. Watford: BRE Press, 2007.

[5] BUILDING RESEARCH ESTABLISHMENT. *Radon – Guidance on protective measures for new dwellings in Scotland*. BR376. Watford: BRE Press, 1999.

[6] BUILDING RESEARCH ESTABLISHMENT. *Radon – Guidance on protective measures for new dwellings in Northern Ireland*. BR413. Watford: BRE Press, 2001.

Licensed by Maslic Asphalt Council,Malcolm Grinstead . Current version as of 26 March 2003.
Not to be distributed/networked. If you need multi-user/network access visit www.bsigroup.com/license.

[7] GREEN, B.M.R., MILES, J.C.H. AND REES, D.M. *Radon in Dwellings in Scotland: 2008 Review and Atlas*. HPA-RPD-051. Didcot: Health Protection Agency, 2009. [2)]

[8] BAMFORTH, P.B. *Early-age thermal crack control in concrete*. C660. London: CIRIA, 2007.

Further reading

BS EN 1991, *Eurocode 1: Actions on structures*

BS EN 1996, *Eurocode 6: Design of masonry structures*

BS EN 13252, *Geotextiles and geotextile-related products – Characteristics required for use in drainage systems*

Licensed by Maslic Asphalt Council.Malcolm Grinstead . Current version as of 26 March 2003.
Not to be distributed/networked. If you need multi-user/network access visit www.bsigroup.com/license.

[2)] Available from www.hpa.org.uk.

Licensed by Maslic Asphalt Council.Malcolm Grinstead . Current version as of 26 March 2003.
Not to be distributed/networked. If you need multi-user/network access visit www.bsigroup.com/license.

This page deliberately left blank

NO COPYING WITHOUT BSI PERMISSION EXCEPT AS PERMITTED BY COPYRIGHT LAW

British Standards Institution (BSI)

BSI is the national body responsible for preparing British Standards and other standards-related publications, information and services.

BSI is incorporated by Royal Charter. British Standards and other standardization products are published by BSI Standards Limited.

Licensed by Maslic Asphalt Council,Malcolm Grinstead. Current version as of 26 March 2003.
Not to be distributed/networked. If you need multi-user/network access visit www.bsigroup.com/license.

About us

We bring together business, industry, government, consumers, innovators and others to shape their combined experience and expertise into standards -based solutions.

The knowledge embodied in our standards has been carefully assembled in a dependable format and refined through our open consultation process. Organizations of all sizes and across all sectors choose standards to help them achieve their goals.

Information on standards

We can provide you with the knowledge that your organization needs to succeed. Find out more about British Standards by visiting our website at bsigroup.com/standards or contacting our Customer Services team or Knowledge Centre.

Buying standards

You can buy and download PDF versions of BSI publications, including British and adopted European and international standards, through our website at bsigroup.com/shop, where hard copies can also be purchased.

If you need international and foreign standards from other Standards Development Organizations, hard copies can be ordered from our Customer Services team.

Subscriptions

Our range of subscription services are designed to make using standards easier for you. For further information on our subscription products go to bsigroup.com/subscriptions.

With **British Standards Online (BSOL)** you'll have instant access to over 55,000 British and adopted European and international standards from your desktop. It's available 24/7 and is refreshed daily so you'll always be up to date.

You can keep in touch with standards developments and receive substantial discounts on the purchase price of standards, both in single copy and subscription format, by becoming a **BSI Subscribing Member**.

PLUS is an updating service exclusive to BSI Subscribing Members. You will automatically receive the latest hard copy of your standards when they're revised or replaced.

To find out more about becoming a BSI Subscribing Member and the benefits of membership, please visit bsigroup.com/shop.

With a **Multi-User Network Licence (MUNL)** you are able to host standards publications on your intranet. Licences can cover as few or as many users as you wish. With updates supplied as soon as they're available, you can be sure your documentation is current. For further information, email bsmusales@bsigroup.com.

BSI Group Headquarters

389 Chiswick High Road London W4 4AL UK

Revisions

Our British Standards and other publications are updated by amendment or revision.

We continually improve the quality of our products and services to benefit your business. If you find an inaccuracy or ambiguity within a British Standard or other BSI publication please inform the Knowledge Centre.

Copyright

All the data, software and documentation set out in all British Standards and other BSI publications are the property of and copyrighted by BSI, or some person or entity that owns copyright in the information used (such as the international standardization bodies) and has formally licensed such information to BSI for commercial publication and use. Except as permitted under the Copyright, Designs and Patents Act 1988 no extract may be reproduced, stored in a retrieval system or transmitted in any form or by any means – electronic, photocopying, recording or otherwise – without prior written permission from BSI. Details and advice can be obtained from the Copyright & Licensing Department.

Useful Contacts:

Customer Services
Tel: +44 845 086 9001
Email (orders): orders@bsigroup.com
Email (enquiries): cservices@bsigroup.com

Subscriptions
Tel: +44 845 086 9001
Email: subscriptions@bsigroup.com

Knowledge Centre
Tel: +44 20 8996 7004
Email: knowledgecentre@bsigroup.com

Copyright & Licensing
Tel: +44 20 8996 7070
Email: copyright@bsigroup.com

bsi.

...making excellence a habit.™