BRITISH STANDARD

BS 8204-5:2004
+A1:2011

Screeds, bases and in situ floorings —

Part 5: Mastic asphalt underlays and wearing surfaces — Code of practice

Licensed by Mastic Asphalt Council.Malcolm Grinstead. Current version as of 20 September 2004.
Not to be distributed/networked. If you need multi-user/network access visit www.bsigroup.com/license.

ICS 91.060.30

Confirmed
January 2010

NO COPYING WITHOUT BSI PERMISSION EXCEPT AS PERMITTED BY COPYRIGHT LAW

BSI
British Standards

Committees responsible for this British Standard

The preparation of this British Standard was entrusted by Technical Committee B/507, Paving units, kerbs, screeds and in situ floorings, to Subcommittee B/507/6, Screeds and in situ floorings, upon which the following bodies were represented:

Association of Concrete Industrial Flooring Contractors

Association of Lightweight Aggregate Manufacturers

British Cement Association

Concrete Society

Contract Flooring Association

Federation of Plastering and Drywall Contractors

Federation of Resin Flooring Formulators and Applicators

Mastic Asphalt Council

Mortar Producers Association Limited

National Federation of Terrazzo-Marble and Mosaic Specialists

National Specialist Contractors Council

Quarry Products Association

Society of Chemical Industry

Co-opted members

Licensed by Mastic Asphalt Council:Malcolm Grinstead. Current version as of 20 September 2004.
Not to be distributed/networked. If you need multi-user/network access visit www.bsigroup.com/license.

This British Standard was published under the authority of the Standards Policy and Strategy Committee on 20 September 2004

© BSI 2011

First published December 1994
Second edition September 2004

Amendments issued since publication

Amd. No.	Date	Comments
A1	31 July 2011	See foreword

The following BSI references relate to the work on this British Standard:
Committee reference B/507/6
Draft for comment 02/105806 DC; 11/30240681 DC

ISBN 978 0 580 74252 1

Contents

		Page
Committees responsible		Inside front cover
Foreword		ii
1	Scope	1
2	Normative references	1
3	Terms and definitions	1
4	Exchange of information and time schedule	2
5	Materials and equipment	3
6	Design	4
7	Construction work on site	13
8	Workmanship	14
9	Protection	15
10	Inspection and testing of flooring	15
11	Maintenance of mastic asphalt flooring	16
12	Repair of mastic asphalt flooring	16
Annex A (normative) Determination of slip resistance of pedestrian surfaces by the ramp/trolley method, alternatively known as the roller coaster method		17
Bibliography		22
Figure 1 — Flooring and skirting for wet areas		7
Figure 2 — Drainage channel with light-duty grating		8
Figure A.1 — Trolley and ramp		18
Figure A.2 — Calculation to determine the coefficient of friction or the equivalent slip resistance		20
Table 1 — Grades and thicknesses of mastic asphalt for underlays and wearing surfaces for various uses		6
Table 2 — Treatments for vertical and sloping surfaces to receive mastic asphalt		12
Table 3 — Classification of surface regularity for mastic asphalt flooring and underlays		13
Table A.1 — Reproducibility		20

Licensed by Mastic Asphalt Council/Malcolm Grinstead. Current version as of 20 September 2004.
Not to be distributed/networked. If you need multi-user/network access visit www.bsigroup.com/license.

© BSI 2011

Foreword

This part of BS 8204 has been prepared by Subcommittee B/507/6.
BS 8204-5:2004+A1:2011 supersedes BS 8204-5:2004, which is withdrawn.

The start and finish of text introduced or altered by Amendment No. 1 is indicated in the text by tags 〉A1 〈A1. Minor editorial changes are not tagged.

Amendment A1 introduces the following principal change.

- Insertion of Annex A on determination of slip resistance of pedestrian surfaces by the ramp/trolley method, alternatively known as the roller coaster method.

Mastic asphalt waterproofing is described in BS EN 12970.

A well-laid mastic asphalt floor of the correct grade provides a hard, durable surface that is easily cleaned and is not inherently slippery. It is able to carry heavy loads, provided that care is taken to avoid static or mobile loads which might cause indentation. It is unaffected by water.

Mastic asphalt flooring is an adaptable material laid either as a wearing surface or as an underlay for decorative floor finishes. When laid as a mastic asphalt waterproofing membrane, it can be used in wet process areas or in areas where washing down is a requirement.

The other parts of BS 8204 are the following:

— Part 1:2003, *Concrete bases and cement sand levelling screeds to receive floorings — Code of practice;*

— Part 2:2003, *Concrete wearing surfaces — Code of practice;*

— Part 3:2004, *Polymer modified cementitious levelling screeds and wearing screeds — Code of practice;*

— Part 4:2004, *Code of practice for terrazzo wearing surfaces;*

— Part 6:2001, *Synthetic resin floorings — Code of practice;*

— Part 7:2003, *Pumpable self-smoothing screeds — Code of practice.*

As a code of practice, this British Standard takes the form of guidance and recommendations. It should not be quoted as if it were a specification and particular care should be taken to ensure that claims of compliance are not misleading.

This publication does not purport to include all the necessary provisions of a contract. Users are responsible for its correct application.

Compliance with a British Standard cannot confer immunity from legal obligations.

Summary of pages

This document comprises a front cover, an inside front cover, pages i and ii, pages 1 to 22, an inside back cover and a back cover.

The BSI copyright notice displayed in this document indicates when the document was last issued.

Licensed by Mastic Asphalt Council:Malcolm Grinstead . Current version as of 20 September 2004.
Not to be distributed/networked. If you need multi-user/network access visit www.bsigroup.com/license.

© BSI 2011

1 Scope

This part of BS 8204 makes recommendations for the types and grades of materials, design, work on site, protection, inspection and testing, maintenance and repair for in situ mastic asphalt for flooring applied as a wearing surface or underlay, incorporating waterproof membranes where required. It is applicable to mastic asphalt applied hot to concrete bases and screeds and concrete suspended floors.

It is intended for mastic asphalt contractors, specifiers, builders and designers, and main contractors.

It gives recommendations for mastic asphalt flooring in buildings applied, as an underlay or as a wearing surface, on a concrete base or screed.

NOTE This part of BS 8204 is intended to be read in conjunction with BS 8204-1.

Licensed by Mastic Asphalt Council.Malcolm Grinstead . Current version as of 20 September 2004.
Not to be distributed/networked. If you need multi-user/network access visit www.bsigroup.com/license.

2 Normative references

The following referenced documents are indispensable for the application of this document. For dated references, only the edition cited applies. For undated references, the latest edition of the referenced document (including any amendments) applies.

BS 747, *Reinforced bitumen sheets for roofing — Specification.*

BS 1447:1988, *Specification for mastic asphalt (limestone fine aggregate) for roads, footways and pavings in building.*

BS 5284:1993, *Methods of sampling and testing mastic asphalt used in building and civil engineering.*

BS 6100-1.3.3:1987, *Glossary of building and civil engineering terms — Part 1: General and miscellaneous — Section 1.3: Parts of construction works — Subsection 1.3.3: Floors and ceilings.*

BS 6100-2.4.1:1992, *Glossary of building and civil engineering terms — Part 2: Civil engineering — Section 2.4: Highway, railway and airport engineering — Subsection 2.4.1: Highway engineering.*

BS 6925:1988, *Specification for mastic asphalt for building and civil engineering (limestone aggregate).*

BS 7976-2, *Pendulum testers — Part 2: Method of operation.*

BS 8204-1:2003, *Screeds, bases and in situ floorings — Part 1: Concrete bases and cement sand levelling screeds to receive floorings — Code of practice.*

BS 8218:1998, *Code of practice for mastic asphalt roofing.*

BS EN 12970:2000, *Mastic asphalt for waterproofing — Definitions, requirements and test methods.*

BS EN 13318, *Screed material and floor screeds — Definitions.*

BS EN 13813, *Screed material and floor screeds — Screed material — Properties and requirements.*

3 Terms and definitions

For the purposes of this British Standard, the terms and definitions given in BS 6100-1.3.3:1987, BS 6100-2.4.1:1992, BS 8204-1:2003 and BS EN 13318 and the following apply.

3.1
coat
layer of mastic asphalt

3.2
rubbing
process by which the last coat of mastic asphalt is given a matt surface finish by the use of clean, dry sand

3.3
spreader
operative skilled in the laying and finishing of mastic asphalt

3.4
float
flat-faced wooden tool with a handle

4 Exchange of information and time schedule

4.1 General

It is essential that consultations and exchange of information between all parties concerned with the building operations are arranged at an early date. This will enable each party to have full knowledge of the particulars of the work so that they can cooperate in producing the conditions required to complete a satisfactory job.

4.2 Exchange of information

It is essential that the designer provides in good time all relevant information to those responsible for laying the flooring and to others whose work might be affected, including whichever of the following are applicable:

a) description, situation and address of site and means of access;

b) those conditions of contract which could practically affect this particular work;

c) location and area of floors to be covered;

d) age and nature of the base and any preparatory treatment required;

e) finished floor level and maximum permissible departure from datum;

f) class or classes of surface regularity required for the bases and the finished mastic asphalt flooring;

g) any special requirements related to slip resistance;

h) type of damp-proofing;

i) type and thickness of screed, if any;

j) any work consequent upon services passing through the flooring;

k) treatment of skirtings;

l) treatment of junctions with adjacent floors and floorings;

m) type of surface finish;

n) any special requirements related to underfloor heating;

o) date for the completion of preliminary work;

p) dates for the start and completion of various sections of the floor;

q) details of any conformity testing required;

r) requirements relating to samples of mastic asphalt for testing purposes;

s) nature of the final surface, and special finishes required.

4.3 Provision of utilities, facilities and materials

To prevent misunderstanding, particularly at the tendering stage, and to avoid possible situations detrimental to installation, it should be made clear who will be responsible for providing the following:

a) adequate clean, dry, lockable storage space, protected from frost (if necessary);

b) a secure storage compound for gas bottles, having a fence not less than 2 m high;

c) adequate ventilation in confined areas;

d) adequate artificial lighting, if required;

e) provision of a suitable level site for the mixer or mixers, blocks of mastic asphalt, and where relevant coarse aggregate, as close as practicable to the work;

f) unloading and hoisting facilities, if required.

Licensed by Mastic Asphalt Council:Malcolm Grinstead. Current version as of 20 September 2004.
Not to be distributed/networked. If you need multi-user/network access visit www.bsigroup.com/license.

 © BSI 2011

4.4 Time schedule

In considering the time schedule, in addition to the usual intervals between commencement and completion of work by the various trades involved, allowances should be made for the following:

a) installation of all doors and windows and heating within the building, which is especially relevant to laying grade I flooring (see **5.1.2**);

b) laying of underfloor services; preferably this should be completed before the base is formed as there is a risk of subsequent cracking if services are embedded in the flooring;

c) curing and drying of the base concrete before the flooring is laid, where appropriate;

d) cooling and hardening of the flooring;

e) period of protection of the completed floor from damage by other trades, including restriction of access;

f) siting of plant.

5 Materials and equipment

5.1 Mastic asphalt

5.1.1 *General*

The designer should take into account the relevant requirements of BS EN 13813.

CAUTION Molten mastic asphalt should be used with care due to its high temperature.

5.1.2 *Properties*

The mastic asphalt should be one of the following:

a) mastic asphalt for flooring of type F1076 of BS 6925:1988;

b) coloured mastic asphalt for flooring of type F1451 of BS 6925:1988;

c) mastic asphalt for paving conforming to BS 1447:1988;

d) mastic asphalt for waterproofing in accordance with BS EN 12970:2000.

Type F1076 and type F1451 mastic asphalt for flooring are graded according to their usage as follows:

— grade I: special hard flooring;
— grade II: light duty flooring;
— grade III: medium duty flooring;
— grade IV: heavy duty flooring.

Type F1076 and type F1451 mastic asphalt do not cover grades of mastic asphalt for special applications such as chemical resistant, or spark free, flooring, for which purposes proprietary variants are available. Type F1076 and type F1451 mastic asphalt are also not suitable for external applications such as loading bays, balconies and rooftop car parks for which paving grade mastic asphalt is specified in BS 1447:1988.

Mastic asphalt supplied cast into blocks suitable for transporting and handling or delivered to the site ready for use in hot-charge transporters should be used.

5.2 Coarse aggregate

Coarse aggregate for grade IV flooring should be clean igneous or calcareous rock or siliceous material conforming to the requirements given in BS 6925:1988, Table 5.

Coarse aggregate for paving grades should be crushed rock conforming to the requirements given in BS 1447:1988, Table 3.

5.3 Separating membrane

The separating membrane should be one of the following:

a) glass fibre tissue of mass per unit area 50 g/m^2 to 70 g/m^2;

b) black sheathing felt, conforming to BS 747, comprising a batt of jute fibre impregnated with bitumen.

Licensed by Mastic Asphalt Council,Malcolm Grinstead . Current version as of 20 September 2004.
Not to be distributed/networked. If you need multi-user/network access visit www.bsigroup.com/license.

5.4 Expanded metal lathing

Expanded metal lathing should be bitumen-coated plain expanded metal lathing with an aperture size of not less than 10 mm in the short way of mesh direction and not less than 0.46 mm thick.

5.5 Sand for rubbing

Rubbing sand should be clean, dry sand from natural deposits, predominantly passing a 600 μm test sieve and retained on a 212 μm test sieve, both test sieves conforming to BS 8218:1998.

5.6 High bond primer

A high bond primer, which is a modified synthetic rubber latex dispersion, should be used for application to vertical surfaces to provide a key.

5.7 Float

A float should be used for spreading and finishing the surface of the mastic asphalt.

5.8 Gauges

Gauges, comprising wood or metal strips of the required thickness, should be used as temporary boundaries to bays or elsewhere, to assist the spreader in laying the mastic asphalt.

5.9 Mechanical asphalt mixer

A mechanical asphalt mixer, which is a mobile container, fitted with heating and powered stirrers to provide mechanical agitation, should be used for the purpose of re-melting mastic asphalt prior to laying.

5.10 Mastic asphalt cauldron

As an alternative to a mechanical asphalt mixer, a mastic asphalt cauldron, which is a cylindrical steel vessel fitted with a fire-box, may be used at the site for the purpose of re-melting mastic asphalt prior to laying. Generally, a mastic asphalt cauldron is not mechanically agitated.

5.11 Heated dumper

A heated dumper truck with an insulated container and mechanical agitation may be used for the transportation of molten mastic asphalt up to the point of laying.

5.12 Hot-charge transporter

A hot-charge transporter fitted with a heater and mechanical agitation should be used for the delivery of ready-for-use mastic asphalt to site.

6 Design

6.1 Selection of grades of mastic asphalt flooring

Factors influencing the selection of grades of mastic asphalt flooring should be considered at an early stage in the design and should include the following:

a) the constructional form of the base on which the flooring is to be laid, e.g. ground supported slab, suspended floor, or screed;

b) any falls or drainage facilities required;

c) the means of providing a transition from one level to another particularly at thresholds;

d) features such as details of finishing against other materials or floor finishes laid to falls;

e) provision of a waterproofing layout;

f) the type and intensity of traffic anticipated;

g) details of any fixtures or fittings, particularly where these are fixed into the base and penetrate the asphalt;

h) the use including loading, rates of travel, type and width of tyre of any wheeled conveyances, e.g. fork-lift trucks, trolleys;

Licensed by Mastic Asphalt Council/Malcolm Grinstead. Current version as of 20 September 2004.
Not to be distributed/networked. If you need multi-user/network access visit www.bsigroup.com/license.

 © BSI 2011

i) the weights of standing loads, their bearing area and any point loading;

j) the anticipated ambient temperature within the building;

k) maximum and minimum temperatures, and any other conditions likely to affect the performance of the flooring either during laying or in service;

l) any exposure of the mastic asphalt to acids, oils, greases or other substances and their concentration and temperature;

m) details of the mastic asphalt flooring surface required, e.g. level of slip resistance or need for ease of cleaning;

n) details of floor finishes to be applied to a mastic asphalt underlay and the adhesive to be used.

The effects of some of these factors are interrelated, e.g. loads and temperatures. For specific conditions, advice should be sought from the mastic asphalt manufacturer.

A guide to the selection of the appropriate grade of flooring and recommended thicknesses for various applications is given in Table 1.

6.2 Base to receive mastic asphalt

6.2.1 *General*

Surfaces to which mastic asphalt is to be applied should be installed or prepared so as to have a true and even surface substantially free from irregularities such as abrupt changes in levels, hollows, ridges, dips, fins, and concrete, mortar or plaster droppings. The building design should, therefore, be such that the mastic asphalt can be applied at a uniform thickness.

6.2.2 *Concrete bases*

Concrete bases to receive mastic asphalt directly should be designed and constructed following the recommendations in BS 8204-1:2003. The surface should be provided with a float finish, and a surface regularity of SR2, or as necessary for the finished surface. Any falls required should be formed in the base.

Any damp-proof membrane and/or thermal insulation should be placed below the concrete base slab.

Adequate end and side restraint should be provided to precast concrete beams and similar units in order to reduce their structural movement to a minimum.

6.2.3 *Screeds*

Cement sand and fine concrete screeds should be designed and laid following the recommendations given in BS 8204-1. The in situ crushing resistance (ISCR) of the screed should be at least category B when tested in accordance with the method given in BS 8204-1:2003, Annex C.

The surface should be provided with a float finish, and a surface regularity of SR2, or as specified by the designer for the finished surface. Any falls required should be formed in the base supporting the screed.

Licensed by Mastic Asphalt Council.Malcolm Grinstead. Current version as of 20 September 2004.
Not to be distributed/networked. If you need multi-user/network access visit www.bsigroup.com/license.

Table 1 — Grades and thicknesses of mastic asphalt for underlays and wearing surfaces for various uses

Application	Flooring grade and range of thickness				Paving grade
	I 15 mm to 20 mm	II 15 mm to 20 mm	III 20 mm to 30 mm	IV 30 mm to 50 mm	BS 1447:1988 25 mm to 50 mm
Underlays					
For resilient floorings	✓				
For hard floorings		✓			
Wearing surfaces					
Hospital wards	✓				
School classrooms	✓				
Corridors					
light traffic		✓			
heavy traffic			✓		
Shop flooring					
to take moveable racks	✓				
to take fixed racks		✓			
Offices	✓				
Factory flooring					
light-duty		✓			
medium-duty			✓		
heavy-duty				✓	
Loading sheds					
internal				✓	
external					✓
Breweries				✓	
Railway platforms					
internal				✓	
external					✓
Domestic flooring	✓	✓			
Flooring subject to heavy foot traffic					
internal			✓		
external					✓
Unheated warehouses and unheated sports halls					✓

NOTE 1 Grade I flooring should not be laid at temperatures below 10 °C, see **6.6.2**.

NOTE 2 For special requirements, such as suspended floors where wet processes are used, see **6.3**.

NOTE 3 A ✓ indicates the recommended grade for each application.

Licensed by Mastic Asphalt Council/Malcolm Grinstead. Current version as of 20 September 2004.
Not to be distributed/networked. If you need multi-user/network access visit www.bsigroup.com/license.

© BSI 2011

6.3 Mastic asphalt waterproofing

On ground-supported and suspended concrete bases, where wet processes are to be used, mastic asphalt should be laid in two coats, the first coat being an underlay of waterproofing mastic asphalt as recommended in **5.1.2**d). A single layer of mastic asphalt roofing grade material should be applied horizontally beneath the mastic asphalt flooring layer to ensure a waterproof specification. The roofing material should be continued vertically in two or three coats at least 180 mm high to provide waterproof protection. This system should be used in toilet and shower compartments on suspended concrete slabs over accommodation areas, wet process areas and in breweries and food factories (see Figure 1 for typical details).

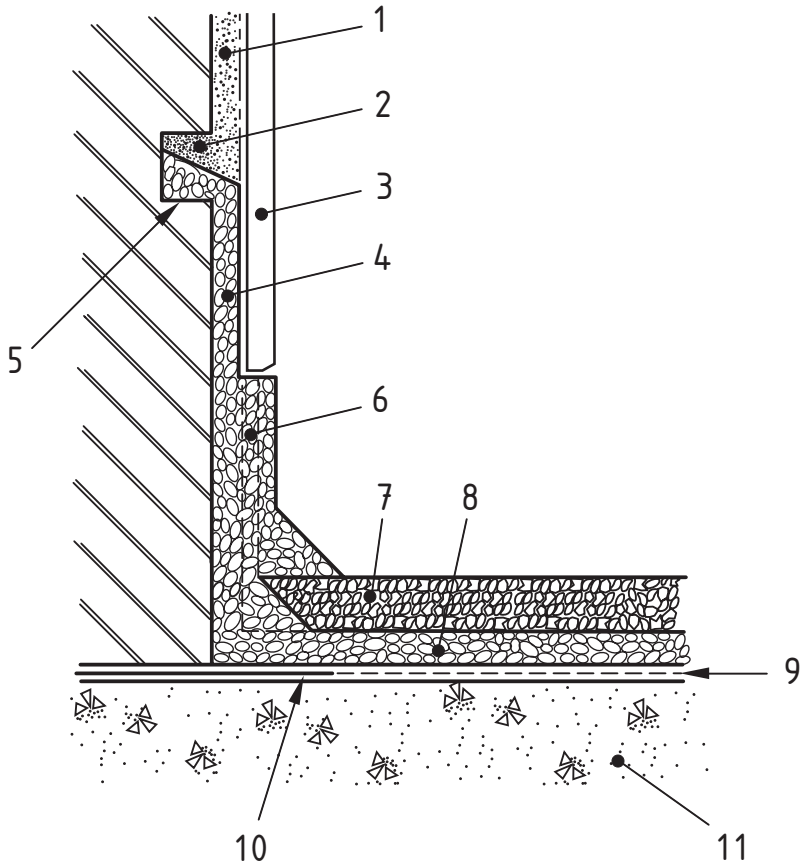

Key

1 Rendering
2 Cement mortar pointing
3 Wall tiling (only if required)
4 First coat skirting carried up behind tiling
5 25 mm × 25 mm chase in wall
6 20 mm three-coat skirting with angle or coved fillet in mastic asphalt
7 Appropriate thickness of flooring grade mastic asphalt
8 12 mm one-coat mastic asphalt (waterproofing layer)
9 Glass fibre tissue separating membrane
10 Damp-proof course if required extending 75 mm under mastic asphalt
11 Concrete or cementitious screed laid to falls with a float finish

Figure 1 — Flooring and skirting for wet areas

Licensed by Mastic Asphalt Council:Malcolm Grinstead . Current version as of 20 September 2004.
Not to be distributed/networked. If you need multi-user/network access visit www.bsigroup.com/license.

6.4 Drainage of floor areas (falls and channels to shed water)

Where wet processes or regular cleaning of the floor is a user requirement it is essential that careful consideration is given to the provision of adequate falls to channels and gullies to prevent ponding.

Falls are essential where acid and chemical resistant mastic asphalt is laid, in order to facilitate washing down. In shower rooms similar provisions are essential.

The arrangement of falls and the location of drainage outlets are interdependent and should be considered carefully at the design stage as adjustment of finished levels will be difficult at a later stage.

Where channels are needed, they should be formed in the base and lined with appropriate material. It is recommended that falls with a gradient of not less than 1 in 60 be provided both over the general floor area and in channels (see Figure 2).

Where mastic asphalt is an underlay to ceramic tiling or similar pavings, and surface drainage is required, it is essential that the gullies are located at the level of the mastic asphalt waterproofing. An adequate number of outlets should be provided, of a type suitable for use in conjunction with mastic asphalt.

6.5 Effects of temperature

Mastic asphalt is a thermoplastic material. Its resistance to indentation will be reduced with increase in temperature. As flooring grade mastic asphalt is liable to be damaged at very low temperatures, it should never be laid externally or in unheated buildings. For these locations paving grade asphalt should be used.

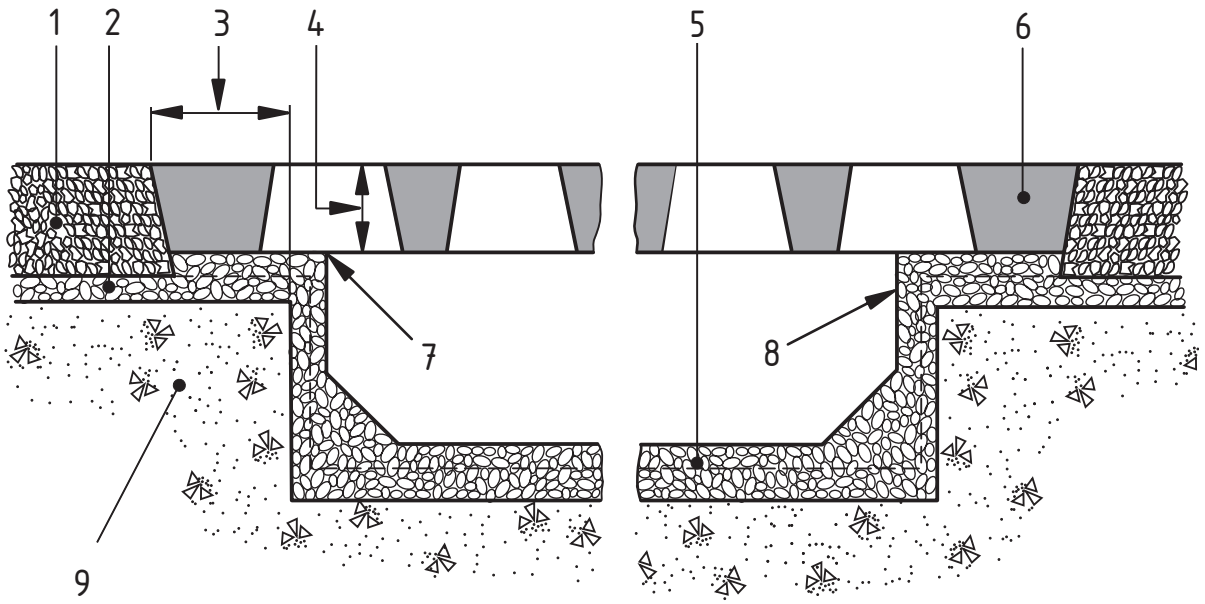

Key

1 Appropriate thickness of flooring grade mastic asphalt
2 12 mm one-coat mastic asphalt (waterproofing layer)
3 50 mm minimum bearing width
4 Not thicker than flooring grade mastic asphalt
5 20 mm two-coat mastic asphalt
6 Channel grating frames (if used) should be without fixing lugs which might pierce the asphalt
7 Increase thickness of waterproofing or use bituminous packing if thinner than paving grade asphalt
8 13 mm two-coat mastic asphalt with fillet
9 Concrete or screed

Figure 2 — Drainage channel with light-duty grating

Licensed by Mastic Asphalt Council:Malcolm Grinstead . Current version as of 20 September 2004.
Not to be distributed/networked. If you need multi-user/network access visit www.bsigroup.com/license.

© BSI 2011

6.6 Mastic asphalt

6.6.1 *General*

All grades of mastic asphalt can be coloured red or black.

The total thickness of the mastic asphalt flooring should be appropriate to the traffic conditions.

Usually the mastic asphalt should be laid in one coat, but multi-coat work should be used where a waterproofing membrane is necessary (see **6.3**).

Multi-coat work should be used for regulating courses (see **6.9**).

6.6.2 *Grade I (Special hard flooring or underlay for resilient floorings)*

Grade I flooring should be laid in one coat within the range of 15 mm to 20 mm thick. It can be used in: hospital wards; schools; shop floors to take moveable racks; offices; and domestic floors. Grade I flooring can also be used as an underlay for other floor finishes.

Grade I floorings are designed for situations with relatively high ambient temperatures, i.e. 25 °C to 30 °C.

Grade I flooring should be planned so that the mastic asphalt is not restrained in any way during the cooling period, and so that no large adjacent bay areas are laid at the same time where excessive cooling shrinkage could occur. Care should be taken to avoid restraint at door thresholds, at internal and external angles of walls or partitions and around stanchions, pipes, machine bases, etc. Appropriately positioned battens, set slightly away from the vertical surface involved, will allow free movement of the mastic asphalt at these points, the asphalt coat being completed after removal of the battens.

Grade I flooring should not be laid when the ambient temperature is below 10 °C, nor should it be laid in areas where it is likely to be subjected in service to ambient temperatures below 10 °C. In such situations grade II or grade III flooring should be used.

6.6.3 *Grade II (Light-duty flooring or underlay for hard floorings)*

Grade II flooring should be laid in one coat within the range of 15 mm to 20 mm thick. It is suitable for a wide range of floor conditions where point loading will not occur or where shallow indentations are acceptable. It is suitable for shop floors to take fixed racks, light assembly factory floors for foot traffic only or domestic floors (where minor indentation is acceptable). Grade II flooring can also be used as an underlay for other floor finishes.

6.6.4 *Grade III (Medium-duty flooring)*

Grade III flooring should be laid in one coat within the range of 20 mm to 30 mm thick. It is a general purpose flooring suitable for medium-duty industrial floors, floors subjected to heavy foot traffic, hospital corridors and continuously heated sports halls.

6.6.5 *Grade IV (Heavy-duty flooring)*

Grade IV flooring should be laid in one coat within the range of 30 mm to 50 mm thick. It is intended for situations where the floor is subjected to mechanical trucks, trolleys, severe abrasion, heavy static loads or impact.

In areas of heavy traffic, and areas where heavy static loads are anticipated, such as aprons in front of loading bays, a proprietary metal grillage should be laid over a first coat of flooring grade mastic asphalt and its interstices filled with a suitable paving or flooring grade mastic asphalt. The use of such grillages will serve to limit the degree of indentation of the mastic asphalt.

In the case of grade IV material, the percentage of coarse aggregate to be added may be varied within the limits given in BS 6925:1988, Table 5, in proportion to the thickness to be laid.

6.6.6 *Paving grade flooring*

Paving grade flooring should be laid in one coat within the range of 25 mm to 50 mm thick. It may be laid externally or in unheated areas. In areas of heavy traffic or areas where heavy loads are anticipated, reference should be made to the mastic asphalt manufacturer for guidance.

In the case of a paving grade material, the percentage of coarse aggregate to be added may be varied within the limits given in BS 1447:1988, Table 3, in proportion to the thickness to be laid.

Licensed by Mastic Asphalt Council.Malcolm Grinstead. Current version as of 20 September 2004.
Not to be distributed/networked. If you need multi-user/network access visit www.bsigroup.com/license.

6.7 Special applications

6.7.1 *General*

Where particular conditions have to be met and where mastic asphalt conforming to type F1076 or type F1451 of BS 6925:1988 does not fulfil certain specific requirements, special proprietary grades of mastic asphalt should be used.

6.7.2 *Chemical and acid resistant flooring*

Mastic asphalt manufactured with limestone aggregate will be readily attacked by acids. Each situation should be considered individually and the fullest technical information obtained, including the nature and concentration of the liquors, the degree of spillage expected and the temperatures involved.

The majority of industrial solvents will attack mastic asphalt.

6.7.3 *Gritless flooring*

In certain circumstances where sparking is a concern, such as in some types of munition factories, special grades of mastic asphalt should be used in order to minimize the risks of fire or of explosion from sparking. Where gritless flooring is required, a mastic asphalt manufacturer should be consulted for guidance.

6.7.4 *Flooring for unheated buildings*

In unheated buildings, such as warehouses, and in buildings with intermittent heating, such as sports halls, which can be subject to considerable seasonal temperature variations, the mastic asphalt used should be of a suitable proprietary grade or paving grade conforming to BS 1447:1988.

In unheated sports halls, the flooring should be laid to a thickness not less than 25 mm on a glass fibre tissue separating membrane. Where vibration or impact is expected the flooring should be laid directly on the base.

6.7.5 *Postal sorting office flooring*

A proprietary grade of mastic asphalt flooring should be used for the traffic conditions and requirements of postal sorting office floors. Where such flooring is required, a mastic asphalt manufacturer should be consulted for guidance.

6.7.6 *Tank room flooring*

Where water storage is located in a tank room at or near roof level the flooring is essentially a waterproof lining serving a similar function to that of the mastic asphalt roofing. The amount of usage might be no more than that on an average roof and will involve occasional light maintenance traffic. In this situation roofing grade mastic asphalt should be used unless special traffic or environmental conditions have to be considered, when the mastic asphalt manufacturer should be consulted.

6.7.7 *Oil-resistant flooring*

Oil-resistant mastic asphalts are no longer available and so a suitable oil-resistant coating should be applied over the mastic asphalt. The oil-resistant coating should be applied as soon as possible after installation of the flooring and prior to any traffic or the floor being put into service.

6.8 Mastic asphalt details

6.8.1 *Surface finishes*

Grade I, II and III floorings can be finished by sand-rubbing or with a natural float finish. Paving grade and grade IV floorings should always be sand-rubbed.

Mastic asphalt underlays should receive a sand-rubbed or natural float finish, in accordance with the requirements of the manufacturer of the floor covering.

6.8.2 *Skirtings and angle fillets*

Skirtings and fillets should be executed in a waterproofing mastic asphalt as given in **5.1.2**d). On new brickwork or concrete, skirting up to 300 mm high should be applied in two coats to a nominal thickness of 13 mm. The height of the skirting will be dictated by design considerations related to wall finishes, etc., but in areas subject to wet processes and wash down, the height should be not less than 150 mm. Skirtings should be tucked into a chase or groove at the top edge. Skirtings over 300 mm are regarded as vertical work and should be applied in three coats to a nominal thickness of 20 mm.

Licensed by Mastic Asphalt Council,Malcolm Grinstead . Current version as of 20 September 2004.
Not to be distributed/networked. If you need multi-user/network access visit www.bsigroup.com/license.

 © BSI 2011

On old or irregular brickwork it is usually necessary for the skirtings to be applied in three coats, the first coat being a dubbing-out coat to correct irregularities in the wall followed by the standard two coat work. The nominal thickness should be 20 mm.

Fillets should be formed either with a cove or an angle, in two coats with a minimum width of 40 mm on the face.

6.8.3 *Chases*

Chases should be provided in brickwork and concrete and should be 25 mm by 25 mm (see Figure 1).

After asphalting, the chase should be pointed using a cement sand mortar containing a polymer admixture such as a styrene butadiene rubber or acrylic type.

6.8.4 *Separating membranes*

Flooring of grades I, II and III should be laid on a separating membrane.

A glass fibre tissue separating membrane should always be used when it is known or suspected that there is no adequate damp-proof membrane below the concrete ground slab or where a suspended concrete slab is located over areas where wet processes could permit moisture vapour to penetrate the concrete. The use of a separating membrane between waterproofing and flooring grades of mastic asphalt is not recommended.

Grade IV flooring should preferably be laid directly on the concrete base; however, a separating membrane is essential in the following circumstances:

a) where the base is of a porous or open texture, such as no fines concrete or lightweight concrete; or

b) where the concrete surface contains fine cracks.

Where surface contamination is evident, the mastic asphalt manufacturer should be contacted for guidance.

6.8.5 *Preparation of vertical and sloping concrete surfaces to provide a key*

Where smooth concrete formwork has been used, the laitance, or any release agent from the formwork, should be removed by a needle gun, wire brushing or other suitable mechanical means. Prior to asphalting, the prepared surface should be treated with an application of a suitable proprietary high bond primer applied in accordance with the manufacturer's instructions.

Alternatively, expanded metal lathing may be mechanically fixed to the concrete to provide the necessary key.

On lightweight aggregate concrete and lightweight concrete blockwork, mechanically fixed expanded metal lathing, on sheathing felt, should be used to provide the necessary key (see Table 2).

6.8.6 *Preparation of brickwork to provide a key*

The horizontal joints in the brickwork should be flush pointed and the brickwork treated with an application of a suitable proprietary high bond primer applied in accordance with the manufacturer's instructions.

Engineering bricks do not provide an adequate key for mastic asphalt and should only be used in association with an application of a suitable proprietary high bond primer, applied in accordance with the manufacturer's instructions, and mechanically fixed expanded metal lathing (see Table 2).

6.9 Regulating courses

On old and uneven floors a mastic asphalt regulating course may be used provided the total thickness permits this. The mastic asphalt manufacturer should be consulted prior to the commencement of work regarding the feasibility of providing a regulating course, and the grade and build up of mastic asphalt to be used.

Licensed by Mastic Asphalt Council.Malcolm Grinstead . Current version as of 20 September 2004.
Not to be distributed/networked. If you need multi-user/network access visit www.bsigroup.com/license.

Table 2 — Treatments for vertical and sloping surfaces to receive mastic asphalt

Substrate	High bond primer[a]	Expanded metal lathing	Expanded metal lathing on sheathing felt
Smooth concrete (alternative treatments)	✓[b]	✓[c]	
Textured concrete (coarse aggregate)	✓		
Lightweight aggregate concrete			✓
Lightweight concrete blockwork			✓
Facing bricks[d]	✓		
Engineering bricks[e]	✓	✓	
Timber			✓
Metal (alternative treatments)	✓	✓	

NOTE A ✓ indicates recommended treatments for each application.

[a] Suitable primer applied in accordance with the manufacturer's instructions.
[b] Applied to concrete with a mechanically prepared surface.
[c] Fixed to concrete with an unprepared surface (not a preferred option).
[d] With flush pointed joints (see **6.8.6**).
[e] Brickwork should be primed prior to fixing expanded metal lathing (see **6.8.6**).

6.10 Tolerances on finished mastic asphalt flooring

6.10.1 *General*

Floor level is defined as the mean height of the floor surface measured in relation to the height of a fixed datum. Some variation in floor level can be allowed without detriment to the satisfactory use of the floor.

Surface regularity or flatness is a measure of the degree of undulation of the surface of the floor. For convenience in checking, tolerances on surface regularity are normally expressed in terms of the permissible departure from the underside of a 2 m straightedge laid in contact with the floor, see BS 8204-1:2003, Annex C.

6.10.2 *Departure from datum*

The designer should specify the maximum permissible departure of the finished surface of the flooring from datum, taking into account the area of the floor and its intended use. For large areas a tolerance of ±15 mm from datum is usually satisfactory.

6.10.3 *Surface regularity*

For normal commercial floors, the maximum departure of the surface from a 2 m straightedge should be 5 mm. A departure of 10 mm might be acceptable for floors where the surface regularity is not critical. In special circumstances a closer tolerance, e.g. a maximum departure of 3 mm under a 2 m straightedge, might be necessary (see Table 3).

The specification of close tolerances can incur increased costs.

The classification of surface regularity for mastic asphalt flooring and underlays is given in Table 3. Details of the method of checking surface regularity are given in BS 8204-1:2003.

There should be no noticeable change in level across any joints in the mastic asphalt flooring.

6.11 Mastic asphalt underlay

Where mastic asphalt is to be used as an underlay it should be laid to the surface regularity selected by the designer from Table 3.

The surface finish of the mastic asphalt underlay should be as specified by the manufacturer of the flooring to be applied.

Licensed by Mastic Asphalt Council,Malcolm Grinstead. Current version as of 20 September 2004.
Not to be distributed/networked. If you need multi-user/network access visit www.bsigroup.com/license.

 © BSI 2011

Table 3 — Classification of surface regularity for mastic asphalt flooring and underlays

Class[a]	Maximum permissible departure from a 2 m straightedge laid in contact with the floor mm	Application	Mastic asphalt grade
SR1	3	High standard floors; special floors	Grades I and II
SR2	5	Normal standard floors	Grades I, II and III
SR3	10	Utility standard floors; other floors, the surface regularity of which is not critical	Grades III and IV and paving grade

[a] As given in BS 8204-1:2003.

6.12 Thermal and sound insulation

Interposing thermal or sound insulation between the structural base and the mastic asphalt flooring is not advisable. The majority of materials used for this purpose do not provide adequate support for the mastic asphalt.

6.13 Movement joints

Allowance should be made for movement joints in mastic asphalt flooring where such joints are incorporated in the base on which the asphalt is applied.

Where floors will be cleaned by washing down, or are in wet process areas, movement joints should not be located at low points of falls or near to gullies or channels.

If a proprietary movement joint system is used it is essential to ensure that it is capable of accepting the expected type of traffic and degree of movement, that the materials of which it is made are compatible with mastic asphalt, and that a secure and watertight joint can be made between the movement joint and the combined mastic asphalt waterproofing and flooring.

Where joints in the concrete base or screed are liable to move, they should be carried through the base and/or screed and the mastic asphalt to the floor surface by means of a proprietary movement joint profile. These vary in depth and thickness. Movement joint profiles should also be used between mastic asphalt and other types of flooring, and centrally over supporting beams and walls of suspended floors.

6.14 Slipperiness

Mastic asphalt is not inherently slippery.

Slip-resistance is improved by initial sand-rubbing. However, frequent polishing will reduce the slip resistance of the surface.

7 Construction work on site

7.1 Work planning

Where mastic asphalt waterproofing is to be overlaid with mastic asphalt flooring the work should be arranged so that the overlaying is undertaken as a continuous operation and precautions should be taken to prevent contamination of the surface of the waterproofing prior to laying the flooring.

7.2 Preparatory sitework prior to asphalting

Before laying of the mastic asphalt flooring is commenced, checks should be made to ensure that:

a) the base has been properly laid to the specified falls, tolerances and finishes; the equivalent of a wood float finish is essential on horizontal concrete screeds or slabs;

b) all chases have been properly cut;

c) all outlets have been installed, located and fixed at the correct height relative to the base;

d) vertical surfaces have been correctly prepared;

e) movement joints have been correctly installed.

Licensed by Mastic Asphalt Council.Malcolm Grinstead . Current version as of 20 September 2004.
Not to be distributed/networked. If you need multi-user/network access visit www.bsigroup.com/license.

8 Workmanship

8.1 Re-melting

Re-melting of mastic asphalt should be carried out in mechanically agitated mixers; cauldrons should only be used in exceptional circumstances, such as those governed by site conditions and the areas of flooring to be laid.

The heating should be controlled to avoid the material becoming overheated to an extent which might affect its properties. The temperature should not exceed 230 °C.

8.2 Transport of molten material

When the material is sufficiently molten to be workable, it should be carried in buckets, wheelbarrows, or heated dumpers to the point of laying. To prevent the molten material from sticking to the buckets, wheelbarrows, etc. these should be sprinkled inside with a small quantity of inorganic dust such as limestone dust. For acid-resistant mastic asphalt a silica or similar acid-resistant dust should be used.

CAUTION Molten mastic asphalt should be used with care due to its high temperature.

8.3 Setting out

The setting out of the floor into bays should be decided by the mastic asphalt contractor. The arrangement of the bays will normally depend on the design of the floor and the number of spreaders engaged, so that the laying and finishing processes can both be easily controlled by the spreaders, in order to achieve the necessary surface regularity.

8.4 Placing the separating membrane

The separating membrane, when required, should be laid loose with lapped joints at least 50 mm wide.

8.5 Laying the flooring

8.5.1 *General*

Laying the flooring should be carried out in accordance with accepted practice as given in **8.5.2**, **8.5.3**, **8.5.4** and **8.5.5**. However, discretion should be allowed to the mastic asphalt contractor if, in his judgement, the circumstances in any particular case call for some modification.

8.5.2 *Horizontal work*

Mastic asphalt flooring should be laid in bays generally in one coat. It should be spread to the specified thickness, timber or metal gauges being used to ensure accuracy. The mastic asphalt should be floated to a uniformly level surface and should be free from roughness or imperfections. If blowing occurs, the bubbles should be stabbed and the area affected carefully made good while the mastic asphalt is still hot.

Multi-coat work should be treated in a manner similar to that for single-coat work, but care should be taken to ensure that the arranged joints in successive layers are not coincident (see **8.5.3**).

8.5.3 *Junctions*

The edges of previously laid bays should be warmed and cleaned by the application of hot mastic asphalt before the joint with the new material is made.

In the case of two-coat work the junction between adjacent bays of mastic asphalt should be not less than 75 mm from the corresponding junction in the preceding coat. This procedure should also be adopted at junctions between the floor finish and skirtings, coves or fillets.

8.5.4 *Skirtings*

Skirtings should be executed in not less than two coats, particular care being taken to ensure proper adhesion of the first coat to the base. Special care should be taken at external angles to ensure the full thickness of the material.

8.5.5 *Cove or angle fillets*

At the intersection of the two planes forming an internal angle and after the mastic asphalt has been laid on horizontal, sloping or vertical surfaces, a solid angle or coved fillet of mastic asphalt, not less than 40 mm wide on the face, should be formed in two coats, immediately after first warming and cleaning the intersection by the temporary application of hot mastic asphalt, before the fillets are formed.

Licensed by Mastic Asphalt Council,Malcolm Grinstead . Current version as of 20 September 2004.
Not to be distributed/networked. If you need multi-user/network access visit www.bsigroup.com/license.

 © BSI 2011

8.5.6 *Sand-rubbed finish*

While the mastic asphalt is still warm, horizontal surfaces should be well rubbed with a wooden float, using clean sand. Special attention should be given to the junctions between bays. All surplus material should be removed after rubbing is completed.

8.5.7 *Natural float finish*

The surface should be finished with a float in a manner similar to that used for a sand-rubbed finish but without the use of sand.

9 Protection

9.1 On completion of laying

The flooring should not be subjected to traffic until the mastic asphalt has cooled to ambient temperature.

9.2 Between completion of laying and handover

Between completion of laying and handover it is essential that mastic asphalt flooring is fully protected from:

a) mechanical and impact damage, including damage from contractors' plant, equipment and materials;

b) careless handling of scaffolding or other builder's accessories;

c) traffic by following trades;

d) contamination by spillage of solvents, diesel fuel or paints.

Concrete, mortar, cement grout or plaster should not be mixed directly on the flooring.

10 Inspection and testing of flooring

10.1 Inspection

The work should be inspected before asphalting is commenced, while it is in progress, and after completion, special attention being paid to the following:

a) general condition of the base;

b) correct laying of the separating membrane, when used;

c) cleanliness of plant for re-melting;

d) correct temperature of the mastic asphalt prior to laying;

e) use of the correct kind of dust to assist removal of mastic asphalt from the buckets, wheelbarrows, etc.;

f) making good where blowing has occurred;

g) correct thickness of the coats of mastic asphalt;

h) correct treatment of junctions and skirtings;

i) removal of all mastic asphalt residues;

j) correctness of the finished level and that the finish is as required.

10.2 Testing

10.2.1 *Floor levels and surface regularity*

At the appropriate time after laying, when the flooring is tested by the methods described in BS 8204-1, the departure from datum and the surface regularity should be within the limits specified.

The number of measurements required to check floor levels and surface regularity should be agreed at the outset between the parties concerned bearing in mind the quality required and the likely time and costs involved [see **4.2**f)].

Licensed by Mastic Asphalt Council:Malcolm Grinstead . Current version as of 20 September 2004.
Not to be distributed/networked. If you need multi-user/network access visit www.bsigroup.com/license.

10.2.2 *Slip resistance*

At the appropriate time after laying, the floor should be tested by the method described in BS 7976-2 [A1] or by the method given in Annex A. [A1]

The slip resistance value [PTV (pendulum test value)] should be greater than 39 in both the wet and the dry states.

10.2.3 *Sampling of mastic asphalt*

When samples of mastic asphalt are required for testing, the sampling procedure adopted should be in accordance with BS 5284:1993.

The requirements regarding samples for testing should be agreed between the parties concerned at the exchange of information stage [see **4.2**r)].

Licensed by Mastic Asphalt Council.Malcolm Grinstead. Current version as of 20 September 2004.
Not to be distributed/networked. If you need multi-user/network access visit www.bsigroup.com/license.

11 Maintenance of mastic asphalt flooring

A mastic asphalt flooring requires periodic, routine attention to obtain the maximum service and to maintain the best decorative effects. The mastic asphalt manufacturer should guide the user in the selection of suitable cleaning agents and polishes for the maintenance of the floor finish. Polishes should be of the emulsion type, free from solvents. Polishes in which wax is prepared in a paste form with a solvent should not be used.

Superficial dirt can normally be removed by washing or scrubbing with warm water and suitable detergents. Where there is much dirt on the flooring, the addition of a small quantity of washing soda to the warm water might be desirable. After the dirt has been removed the floor should be mopped with clean water. It is essential that all oils, fats and greases be removed as soon as possible.

When hosing down, a constant water temperature should be maintained with the water temperature not exceeding 40 °C.

12 Repair of mastic asphalt flooring

Areas of mastic asphalt flooring subjected to heavy traffic might require repairing in order to maintain the flooring in good condition. All repair work to a mastic asphalt surface should be performed by a specialist mastic asphalt contractor. If it is necessary to remove an area of mastic asphalt, the line of the cuts should be covered with molten mastic asphalt until the underlying material has softened. The asphalt should not be removed until this has taken place. In no circumstances should a hammer and chisel be used to cut cold mastic asphalt. Alternatively a disc cutter may be used to remove mastic asphalt. A gas torch with controlled gradual heating may be used in carrying out repairs.

Where mastic asphalt has previously been laid in a single coat the cut edge of the existing mastic asphalt should be warmed using molten mastic asphalt so that a proper joint with the re-laid mastic asphalt can then be formed.

On multi-coat work where a waterproofing coat and a flooring coat have been laid, the cut edge of the existing mastic asphalt should be softened using molten mastic asphalt and the flooring coat removed over a width of approximately 75 mm. A lapped joint with the re-laid waterproofing and flooring grade mastic asphalt should then be formed.

 © BSI 2011

[A1] Annex A (normative) Determination of slip resistance of pedestrian surfaces by the ramp/trolley method, alternatively known as the roller coaster method

A.1 Principle

The device consists of a trolley having four wheels and a slider, together with a ramp. The trolley is given an initial velocity by running down the ramp under the action of gravity. The trolley then runs across the floor area to be tested. The friction generated by the slider traversing the floor causes the trolley to come to rest. The dynamic coefficient of friction is calculated from the distance it takes for the trolley to come to rest.

The device is used to determine the slip resistance of a floor surface by measuring the dynamic coefficient of friction. It might be used, particularly by floor end users, to detect changes in the dynamic coefficient of friction caused by contamination or wear of the floor surface and/or changes caused by the method of cleaning the floor.

NOTE The values of slip resistance obtained with this device have been shown to correlate closely to those obtained with the Pendulum Tester of BS 7976.

A.2 Apparatus

A.2.1 *Trolley*, with four wheels, the front wheels being set such that they, together with the slider, support the main body of the device as it travels across the floor. The rear wheels should be set at a level above the level of the slider such that they are clear of the floor.

The trolley should incorporate a means of measuring the distance it has travelled. This should be connected frictionlessly to the front wheels and shown as a digital read-out on the trolley.

A rubber slider should be mounted on the central longitudinal axis on the underside of the trolley. This should be set towards the rear of the trolley and at an angle of 10° to the plane of the floor. It should consist of a rubber slider 35 mm square. The rubber should have a Shore A hardness of 95±3. The slider should have a striking edge which should not exceed 10 mm, i.e. the wear should not extend beyond the fixing screw hole.

A.2.2 *Ramp*, with a central channel which allows the device to roll down on its four wheels without the rubber slider making contact with the ramp. The ramp should be 900 mm in length and 250 mm in height. It should be provided with a stop at the top end to ensure the correct position of the trolley at the start of the test run.

NOTE A typical trolley and ramp are shown in Figure A.1. [A1]

Licensed by Maslic Asphalt Council,Malcolm Grinstead . Current version as of 20 September 2004.
Not to be distributed/networked. If you need multi-user/network access visit www.bsigroup.com/license.

Licensed by Mastic Asphalt Council.Malcolm Grinstead. Current version as of 20 September 2004.
Not to be distributed/networked. If you need multi-user/network access visit www.bsigroup.com/license.

Dimensions in millimetres

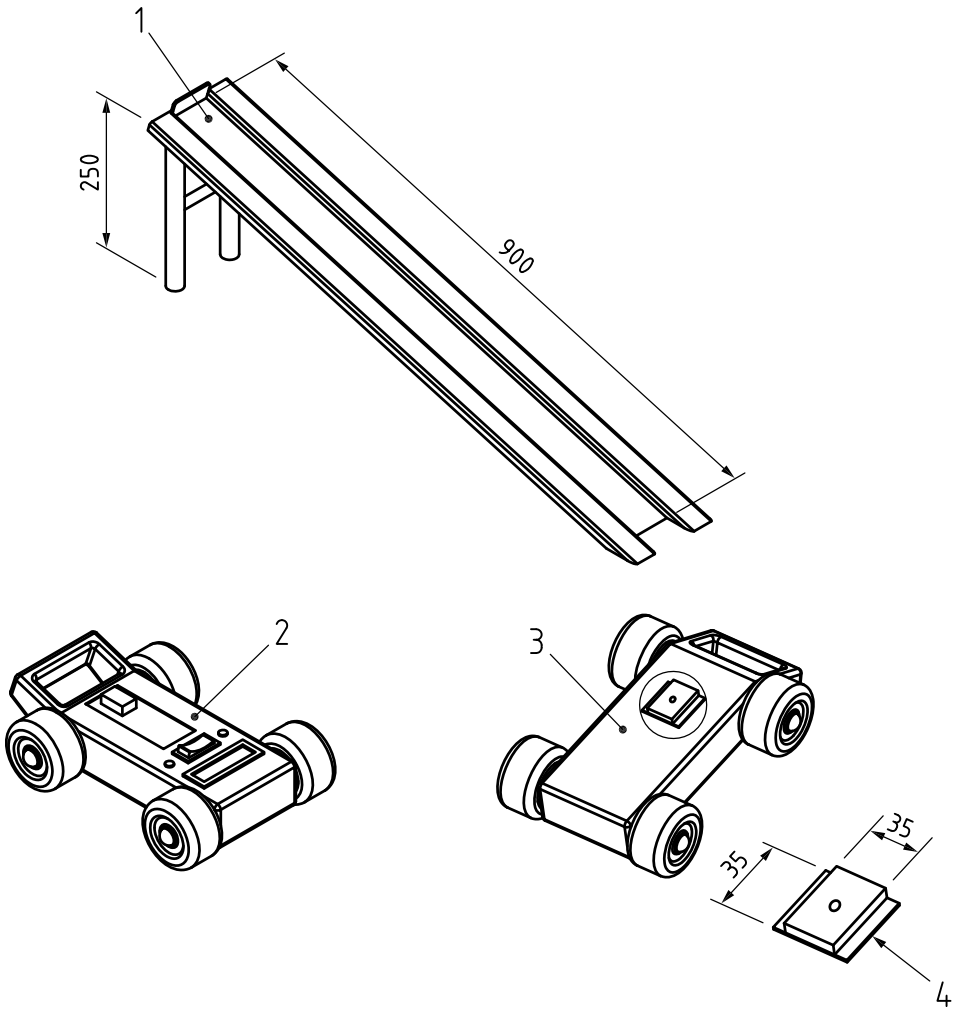

Key

1 Ramp

2 Trolley

3 Bottom of trolley, showing slider

4 Detail of slider

Figure A.1 — Trolley and ramp

A.2.3 Calibration of trolley

A.2.3.1 Checking the digital read-out

Move the trolley forwards in a continuous movement by 1.00 m. The digital read-out should indicate (95±1) units.

A.2.3.2 Checking the bearing friction

Set the ramp to a slope of 1 in 100. Place the trolley on the ramp. After an initial nudge the trolley should roll down the ramp.

A.2.3.3 Checking the mass of the trolley

The mass of the trolley should be (5.0 ± 0.1) kg.

© BSI 2011

A.3 Preparation for test

A.3.1 Set-up of the ramp

The ramp should be set-up on the level surface of the floor, pointing towards and adjacent to the area to be tested. Sufficient space beyond the toe of the ramp should be allowed for the trolley to transit the floor without meeting an obstruction.

NOTE In most situations 1.2 m will be sufficient but on floors which are likely to be slippery in wet conditions 2 m might be required.

On floors with minor slopes, e.g. 1°–2°, the test should be conducted in two opposing directions and the average value taken. On steeper slopes the test should be conducted across the slope so that the path of the trolley is essentially level.

A.3.2 Checking the slider

The wearing face of the slider should be smooth and free from score marks. Re-preparation of the wearing face can be achieved by laying a sheet of P400 abrasive paper on a smooth surface and pushing the device over it several times while holding the rear edge of the sheet to ensure it is not dragged forward during the procedure.

A.3.3 Preparing the floor

If the floor is to be tested as found, no preparation of the floor surface is needed. If the floor is to be tested in the dry/clean state, clean and thoroughly dry an area of 0.5 m × 0.2 m wide beyond the toe of the ramp. If the area is to be tested in the wet state, spray a film of water over an area approximately 0.1 m wide × 1 m long leading from the toe of the ramp.

NOTE This wetted area might need to be extended if the first test run goes beyond the prepared area; this can occur on smooth, low slip-resistant floorings.

A.4 Conducting the test

The trolley should be placed centrally on the ramp and drawn up to the top of the ramp such that the trolley contacts the stop at the top of the ramp.

While the trolley is still in contact with the stop, release the trolley cleanly to allow it to roll down the ramp.

NOTE It is important to ensure that the release does not cause the trolley to be accelerated or retarded during this procedure.

When the trolley has come to rest record the counter-reading.

The trolley should not be touched or moved in any way after it has come to rest and before recording the counter-reading.

Three further test runs should be conducted for that condition in that location.

If the floor is to be tested wet it should be re-prepared between each run.

A.5 Calculation of result

Calculate the mean of the last three of the four counter-readings.

Use Figure A.2 to determine the dynamic coefficient of friction (μ) or the equivalent slip resistance [Pendulum Test Value (PTV)].

Licensed by Mastic Asphalt Council/Malcolm Grinstead. Current version as of 20 September 2004.
Not to be distributed/networked. If you need multi-user/network access visit www.bsigroup.com/license.

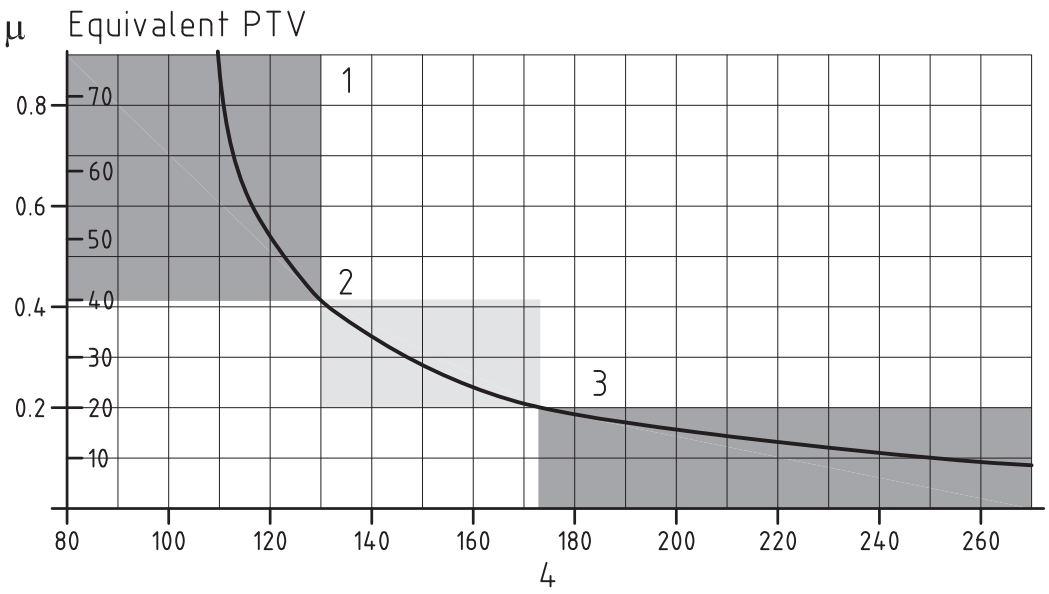

Key
1 Reading less than 130 = low risk of slip
2 Reading between 130 and 173 = medium risk of slip
3 Reading greater than 173 = high risk of slip
4 Counter-reading

Figure A.2 — Calculation to determine the coefficient of friction or the equivalent slip resistance

A.6 Reproducibility

Tests have been conducted using 10 machines and two operators on two surfaces in both wet and dry conditions. Based on the total of 20 results for each of the surface conditions the results were as presented in Table A.1.

Table A.1 — Reproducibility

Flooring type	Condition	Dynamic coefficient of friction	Standard deviation
Tiled floor	Dry	0.57	0.015
Tiled floor	Wet	0.30	0.011
Resilient thermoplastic floor	Dry	0.59	0.020
Resilient thermoplastic floor	Wet	0.16	0.015

Licensed by Mastic Asphalt Council.Malcolm Grinstead. Current version as of 20 September 2004.
Not to be distributed/networked. If you need multi-user/network access visit www.bsigroup.com/license.

© BSI 2011

A.7 Test report

The test report should include:

a) number, title and date of this British Standard;

b) location of the site and drawing or description of the tested position;

c) description of the flooring;

d) a description of the surface – i.e. smooth, profiled, riven, etc.;

e) surface condition – i.e. dry/as found, dry/clean, wet/as found, wet/clean;

f) slider material used;

g) average reading from counter;

h) equivalent pendulum test value or dynamic coefficient of friction (state which);

i) risk assessment category – i.e. high, medium, low;

j) name of person responsible for the test/test organization;

k) date of test.

Licensed by Maslic Asphalt Council.Malcolm Grinstead. Current version as of 20 September 2004.
Not to be distributed/networked. If you need multi-user/network access visit www.bsigroup.com/license.

Bibliography

Standards publications

BS 5385 (all parts), *Wall and floor tiling.*

BS 8204-2:2003, *Screeds, bases and in situ floorings — Part 2: Concrete wearing surfaces — Code of practice.*

BS 8204-3:2004, *Screeds, bases and in situ floorings — Part 3: Polymer modified cementitious wearing surfaces — Code of practice.*

BS 8204-4:1993, *Screeds, bases and in situ floorings — Part 4: Code of practice for terrazzo wearing surfaces.*

Licensed by Maslic Asphalt Council.Malcolm Grinstead . Current version as of 20 September 2004.
Not to be distributed/networked. If you need multi-user/network access visit www.bsigroup.com/license.

© BSI 2011

Licensed by Maslic Asphalt Council.Malcolm Grinstead . Current version as of 20 September 2004.
Not to be distributed/networked. If you need multi-user/network access visit www.bsigroup.com/license.

This page deliberately set blank

BSI — British Standards Institution

BSI is the independent national body responsible for preparing British Standards. It presents the UK view on standards in Europe and at the international level. It is incorporated by Royal Charter.

Revisions

British Standards are updated by amendment or revision. Users of British Standards should make sure that they possess the latest amendments or editions.

It is the constant aim of BSI to improve the quality of our products and services. We would be grateful if anyone finding an inaccuracy or ambiguity while using this British Standard would inform the Secretary of the technical committee responsible, the identity of which can be found on the inside front cover. Tel: +44 (0)20 8996 9000. Fax: +44 (0)20 8996 7400.

BSI offers members an individual updating service called PLUS which ensures that subscribers automatically receive the latest editions of standards.

Buying standards

Orders for all BSI, international and foreign standards publications should be addressed to Customer Services. Tel: +44 (0)20 8996 9001. Fax: +44 (0)20 8996 7001. Email: orders@bsi-global.com. Standards are also available from the BSI website at http://www.bsi-global.com.

In response to orders for international standards, it is BSI policy to supply the BSI implementation of those that have been published as British Standards, unless otherwise requested.

Information on standards

BSI provides a wide range of information on national, European and international standards through its Library and its Technical Help to Exporters Service. Various BSI electronic information services are also available which give details on all its products and services. Contact the Information Centre. Tel: +44 (0)20 8996 7111. Fax: +44 (0)20 8996 7048. Email: info@bsi-global.com.

Subscribing members of BSI are kept up to date with standards developments and receive substantial discounts on the purchase price of standards. For details of these and other benefits contact Membership Administration. Tel: +44 (0)20 8996 7002. Fax: +44 (0)20 8996 7001. Email: membership@bsi-global.com.

Information regarding online access to British Standards via British Standards Online can be found at http://www.bsi-global.com/bsonline.

Further information about BSI is available on the BSI website at http://www.bsi-global.com.

Copyright

Copyright subsists in all BSI publications. BSI also holds the copyright, in the UK, of the publications of the international standardization bodies. Except as permitted under the Copyright, Designs and Patents Act 1988 no extract may be reproduced, stored in a retrieval system or transmitted in any form or by any means – electronic, photocopying, recording or otherwise – without prior written permission from BSI.

This does not preclude the free use, in the course of implementing the standard, of necessary details such as symbols, and size, type or grade designations. If these details are to be used for any other purpose than implementation then the prior written permission of BSI must be obtained.

Details and advice can be obtained from the Copyright & Licensing Manager. Tel: +44 (0)20 8996 7070. Fax: +44 (0)20 8996 7553. Email: copyright@bsi-global.com.

BSI
389 Chiswick High Road
London
W4 4AL

Licensed by Maslic Asphalt Council,Malcolm Grinstead . Current version as of 20 September 2004.
Not to be distributed/networked. If you need multi-user/network access visit www.bsigroup.com/license.