BS 6229:2018



BSI Standards Publication

Licensed by Mastic Asphalt Council Limited,Malcolm Grinstead. Current version as of 23 November 2018.
Not to be distributed/networked. If you need multi-user/network access visit www.bsigroup.com/license.

Flat roofs with continuously supported flexible waterproof coverings – Code of practice

bsi.

Licensed by Mastic Asphalt Council Limited,Malcolm Grinstead. Current version as of 23 November 2018.
Not to be distributed/networked. If you need multi-user/network access visit www.bsigroup.com/license.

Publishing and copyright information

The BSI copyright notice displayed in this document indicates when the document was last issued.

© The British Standards Institution 2018

Published by BSI Standards Limited 2018

ISBN 978 0 580 99654 2

ICS 91.060.20

The following BSI references relate to the work on this document:
Committee reference B/546
Draft for comment 18/30371976 DC

Amendments/corrigenda issued since publication

Date	Text affected

© THE BRITISH STANDARDS INSTITUTION 2018 – ALL RIGHTS RESERVED

Contents

		Page
	Foreword	**ii**
1	Scope	1
2	Normative references	1
3	Terms and definitions	4
4	Design	6
4.1	General design considerations	6
4.2	Types of flat roof system	6
	Figure 1 — Typical warm roof system	7
	Figure 2 — Typical inverted roof system	8
	Figure 3 — Typical cold roof system	9
	Figure 4 — Typical uninsulated roof system	10
4.3	Structure	11
4.4	Roof falls to achieve drainage	11
4.5	Rainwater disposal	12
	Figure 5 — Example of level access to a warm roof system	13
	Figure 6 — Example of level access to an inverted roof system	14
	Figure 7 — Example of level access to an uninsulated roof system	15
4.6	Thermal performance	15
4.7	Control of condensation	17
4.8	Sound attenuation	18
4.9	Fire safety	18
4.10	Surface protection	19
4.11	Rooftop components and installations	20
5	Materials	21
5.1	General	21
5.2	Roof slab/deck materials	21
	Table 1 — Slab/deck materials	21
5.3	Screeds	21
	Table 2 — Materials for screeds	22
5.4	Waterproof layers	22
	Table 3 — Materials for waterproof layers	22
5.5	Thermal insulation	22
	Table 4 — Materials for thermal insulation	22
5.6	Air and vapour control layers	22
	Table 5 — Air and vapour control layers	23
5.7	Vapour permeable membranes (breather membranes)	23
6	Workmanship	23
7	Care and maintenance	24
7.1	Owner's Building Information Manual	24
7.2	Inspections	24
7.3	Maintenance procedures	25
7.4	Repair/renewal	25
	Bibliography	**26**

Summary of pages
This document comprises a front cover, and inside front cover, pages i to iv, pages 1 to 26, an inside back cover and a back cover.

Licensed by Mastic Asphalt Council Limited,Malcolm Grinstead. Current version as of 23 November 2018.
Not to be distributed/networked. If you need multi-user/network access visit www.bsigroup.com/license.

Foreword

Publishing information

This British Standard is published by BSI Standards Limited, under licence from The British Standards Institution, and came into effect on 30 November 2018. It was prepared by Technical Committee B/546, *Flexible Sheets For Waterproofing*. A list of organizations represented on this committee can be obtained on request to its secretary.

Supersession

This British Standard supersedes BS 6229:2003, which is withdrawn.

Information about this document

This code of practice deals with the overall principles of design, construction, care and maintenance of flat roofs with a continuously supported flexible waterproof covering. It does not deal with metal roof coverings which are now the responsibility of B/542, *Roofing and cladding products for discontinuous laying*.

Since publication of the previous edition of this code of practice (BS 6229:2003), many changes have taken place in the functional requirements for buildings, in the performance capability of roofing materials and in some aspects of building practice. The original code of practice has, therefore, undergone a comprehensive review and updating.

NOTE Guidance on the methodology of condensation risk analysis is now covered by BS 5250, workmanship is now covered by BS 8000-4 and guidance on sound insulation and noise reduction for buildings is now covered in BS 8233.

Use of this document

As a code of practice, this British Standard takes the form of guidance and recommendations. It should not be quoted as if it were a specification and particular care should be taken to ensure that claims of compliance are not misleading.

In drafting this code of practice it has been assumed the design and construction of the roof is entrusted to appropriately qualified and competent people and the building owner follows the recommendations concerning inspection, care and maintenance of the roof during its service life.

Any user claiming compliance with this British Standard is expected to be able to justify any course of action that deviates from its recommendations.

Presentational conventions

The provisions of this standard are presented in roman (i.e. upright) type. Its recommendations are expressed in sentences in which the principal auxiliary verb is “should”.

Commentary, explanation and general informative material is presented in smaller italic type, and does not constitute a normative element.

Where words have alternative spellings, the preferred spelling of the Shorter Oxford English Dictionary is used (e.g. “organization” rather than “organisation”).

The word “should” is used to express recommendations of this standard. The word “may” is used in the text to express permissibility, e.g. as an alternative to the primary recommendation of the clause. The word “can” is used to express possibility, e.g. a consequence of an action or an event.

Licensed by Mastic Asphalt Council Limited,Malcolm Grinstead. Current version as of 23 November 2018.
Not to be distributed/networked. If you need multi-user/network access visit www.bsigroup.com/license.

 © THE BRITISH STANDARDS INSTITUTION 2018 – ALL RIGHTS RESERVED

Notes and commentaries are provided throughout the text of this standard. Notes give references and additional information that are important but do not form part of the recommendations. Commentaries give background information.

Contractual and legal considerations

This publication does not purport to include all the necessary provisions of a contract. Users are responsible for its correct application.

Compliance with a British Standard cannot confer immunity from legal obligations.

Licensed by Mastic Asphalt Council Limited,Malcolm Grinstead. Current version as of 23 November 2018.
Not to be distributed/networked. If you need multi-user/network access visit www.bsigroup.com/license.

Licensed by Mastic Asphalt Council Limited,Malcolm Grinstead. Current version as of 23 November 2018.
Not to be distributed/networked. If you need multi-user/network access visit www.bsigroup.com/license.

THIS PAGE DELIBERATELY LEFT BLANK

1 Scope

This revised edition of BS 6229 describes best current practice in the design, construction, care and maintenance of roofs with a flat or curved surface, at a pitch not greater than 10 degrees to the horizontal, with a continuously supported flexible waterproof covering. The supporting structure is either dense and heavy (such as a concrete slab), or consists of framing members supporting a lightweight deck of metal or of timber-based material.

NOTE Provided that the design conditions are similar, many of the recommendations contained in this code of practice apply to roofs at pitches greater than 10 degrees and to those designed as a Green Roof supporting planting.

This British Standard does not apply to certain types of cold stores and high temperature enclosures.

2 Normative references

The following documents are referred to in the text in such a way that some or all of their content constitutes provisions of this document. For dated references, only the edition cited applies. For undated references, the latest edition of the referenced document (including any amendments) applies.

Standards publications

BS 5250, *Code of practice for control of condensation in buildings*

BS 6100-6, *Building and civil engineering — Vocabulary — Part 6: Construction parts*

BS 6925, *Specification for mastic asphalt for building and civil engineering (limestone aggregate)*

BS 8204-1, *Screeds, bases and in situ floorings — Part 1: Concrete bases and cementitious levelling screeds to receive floorings — Code of practice*

BS 8217, *Reinforced bitumen membranes for roofing — Code of practice*

BS 8218, *Code of practice for mastic asphalt roofing*

BS 8220-1, *Guide for security of buildings against crime — Part 1: Dwellings*

BS 8220-2, *Guide for security of buildings against crime — Part 2: Offices and shops*

BS 8220-3, *Guide for security of buildings against crime — Part 3: Storage, industrial and distribution premises*

BS 8233, *Guidance on sound insulation and noise reduction for buildings*

BS 8747, *Reinforced bitumen membranes (RBMs) for roofing — Guide to selection and specification*

BS 9999, *Fire safety in the design, management and use of buildings — Code of practice*

BS EN 300, *Oriented strand boards (OSB) — Definitions, classification and specifications*

BS EN 314-2, *Plywood — Bonding quality — Part 2: Requirements*

BS EN 507, *Roofing products from metal sheet — Specification for fully supported roofing products of aluminium sheet*

BS EN 636, *Plywood — Specifications*

BS EN 1313-1, *Round and sawn timber — Permitted deviations and preferred sizes — Part 1: Softwood sawn timber*

BS EN 1313-2, *Round and sawn timber — Permitted deviations and preferred sizes — Part 2: Hardwood sawn timber*

Licensed by Mastic Asphalt Council Limited,Malcolm Grinstead. Current version as of 23 November 2018.
Not to be distributed/networked. If you need multi-user/network access visit www.bsigroup.com/license.

BS EN 1991-1-1, *Eurocode 1 — Actions on structures — Part 1-1: General actions — Densities, self-weight, imposed loads for buildings*

BS EN 1991-1-3, *Eurocode 1 — Actions on structures — Part 1-3 : General actions — Snow loads*

BS EN 1991-1-4, *Eurocode 1 — Actions on structures — Part 1-4: General actions — Wind actions*

BS EN 1992-1-1 + UK National Annex, *Eurocode 2: Design of concrete structures – Part 1-1: General rules and rules for buildings*

BS EN 1993-1-1 + UK National Annex, *Eurocode 3: Design of steel structures – Part 1-1: General rules and rules for buildings*

BS EN 1994-1-1 + UK National Annex, *Eurocode 4: Design of composite steel and concrete structures – Part 1-1: General rules and rules for buildings*

BS EN 1995-1-1 + UK National Annex, *Eurocode 5: Design of timber structures – Part 1-1: General – Common rules and rules for buildings*

BS EN 1999-1-1 + UK National Annex, *Eurocode 9: Design of aluminium structures – Part 1-1: General structural rules*

BS EN 1999-1-4, *Eurocode 9 — Design of aluminium structures — Part 1-4: Cold-formed structural sheeting*

BS EN 10346:2015, *Continuously hot-dip coated steel flat products for cold forming — Technical delivery conditions*

BS EN 12056-3, *Gravity drainage systems inside buildings — Part 3: Roof drainage, layout and calculation*

BS EN 12524, *Building materials and products — Hygrothermal properties — Tabulated design values*

BS EN 12620, *Aggregates for concrete*

BS EN 13055-1, *Lightweight aggregates — Part 1: Lightweight aggregates for concrete, mortar and grout*

BS EN 13162, *Thermal insulation products for buildings — Factory made mineral wool (MW) products — Specification*

BS EN 13163, *Thermal insulation products for buildings — Factory made expanded polystyrene (EPS) products — Specification*

BS EN 13164, *Thermal insulation products for buildings — Factory made extruded polystyrene foam (XPS) products — Specification*

BS EN 13165, *Thermal insulation products for buildings — Factory made rigid polyurethane foam (PU) products — Specification*

BS EN 13166, *Thermal insulation products for buildings — Factory made phenolic foam (PF) products — Specification*

BS EN 13167, *Thermal insulation products for buildings — Factory made cellular glass (CG) products — Specification*

BS EN 13169, *Thermal insulation products for buildings — Factory made expanded perlite board (EPB) products — Specification*

BS EN 13170, *Thermal insulation products for buildings — Factory made products of expanded cork (ICB) — Specification*

BS EN 13707, *Flexible sheets for waterproofing — Reinforced bitumen sheets for roof waterproofing — Definitions and characteristics*

Licensed by Mastic Asphalt Council Limited,Malcolm Grinstead. Current version as of 23 November 2018.
Not to be distributed/networked. If you need multi-user/network access visit www.bsigroup.com/license.

Licensed by Mastic Asphalt Council Limited,Malcolm Grinstead. Current version as of 23 November 2018.
Not to be distributed/networked. If you need multi-user/network access visit www.bsigroup.com/license.

BS EN 13859-1, *Flexible sheets for waterproofing — Definitions and characteristics of underlays — Part 1: Underlays for discontinuous roofing*

BS EN 13956, *Flexible sheets for waterproofing — Plastic and rubber sheets for roof waterproofing — Definitions and characteristics*

BS EN 13970, *Flexible sheets for waterproofing — Bitumen water vapour control layers — Definitions and characteristics*

BS EN 13984, *Flexible sheets for waterproofing — Plastic and rubber vapour control layers — Definitions and characteristics*

BS EN 16002, *Flexible sheets for waterproofing — Determination of the resistance to wind load of mechanically fastened flexible sheets for roof waterproofing*

BS EN ISO 6946, *Building components and building elements — Thermal resistance and thermal transmittance — Calculation methods*

BS EN ISO 10211, *Thermal bridges in building construction — Heat flows and surface temperatures — Detailed calculations*

BS EN ISO 10456, *Building materials and products — Hygrothermal properties — Tabulated design values and procedures for determining declared and design thermal values*

BS EN ISO 13788, *Hygrothermal performance of building components and building elements — Internal surface temperature to avoid critical surface humidity and interstitial condensation — Calculation methods*

DD CEN/TS 1099, *Plywood – Biological durability – Guidance for the assessment of plywood for use in different use classes*

DD ENV. 1992-1-1, *Eurocode 2: Design of concrete structures – Part 1: General rules and rules for buildings – (together with United Kingdom National Application Document)*

Other publications

[N1] BUILDING RESEARCH ESTABLISHMENT. BRE Scotland Report 443 2006 *Conventions for U-value calculations*

[N2] *The Building Regulations (England and Wales) 2000*, Approved Documents L1 and L2 2013 with 2016 amendments. London: The Stationery Office. www.tso.co.uk

[N3] COMMUNITIES AND LOCAL GOVERNMENT. *Accredited Construction Details* https://www.planningportal.co.uk/info/200135/approved_documents/74/part_l_-_conservation_of_fuel_and_power/6 or for Scotland www.gov.scot/Resource/Doc/217736/0088295.pdf

[N4] BUILDING RESEARCH ESTABLISHMENT. BRE Report BR 497 - *Conventions for calculating linear thermal transmittance and temperature factors* Second edition, 2016

[N5] BUILDING RESEARCH ESTABLISHMENT. SAP 2012 *The Government's Standard Assessment Procedure for Energy Rating of Dwellings* www.bre.co.uk/sap2012

[N6] EUROPEAN ORGANISATION FOR TECHNICAL ASSESSMENT. *Guidelines for European Technical Approval of Inverted Roof Insulation Kits.* ETAG 031-1. EOTA www.eota.eu

[N7] BRITISH BOARD OF AGREMENT. BBA Information No 4, *Inverted roofs – Drainage and U value calculations*

[N8] The Building Regulations 2010, *Site preparation and resistance to contaminants and moisture, Approved Document C* [England]

[N9] The Building Regulations 2010 (and 2012 amendments), *Site preparation and resistance to contaminants and moisture, Approved Document C* [Wales]

© THE BRITISH STANDARDS INSTITUTION 2018 – ALL RIGHTS RESERVED

[N10] Technical Handbook 6, Clause 6.2.1 [Scotland]

[N11] Technical Booklets F1 and F2, Table 2.3 [Northern Ireland]

[N12] Building Bulletin 93 (BB93) *Acoustic Design of Schools - Performance Standards*

[N13] CONSTRUCTION INDUSTRY RESEARCH AND INFORMATION ASSOCIATION. CIRIA Report 127, *Sound Control for Homes*

[N14] *The Building Regulations (England and Wales) 2010*. Approved Document B (Fire Safety) – Volume 2: Buildings other than dwellinghouses (2006 edition incorporating 2010 and 2013 amendments). London: The Stationery Office. www.tso.co.uk

[N15] NATIONAL FEDERATION OF ROOFING CONTRACTORS (NFRC). *Safe2Torch Guidance for the safe installation of torch-on reinforced bitumen membranes and use of gas torches in the workplace.*

[N16] BUILDING RESEARCH ESTABLISHMENT. *Wind scour of ballast on roofs*. 1986. BRE Digest 311 (DG 311). Watford: BRE. www.brebookshop.com

[N17] MASTIC ASPHALT COUNCIL (MAC). *Mastic asphalt - The technical guide*. Hastings: The Mastic Asphalt Council. www.masticasphaltcouncil.co.uk

[N18] SINGLE PLY ROOFING ASSOCIATION (SPRA). *Guide on design criteria for single ply roofing membranes*. London: The Single Ply Roofing Association. www.spra.co.uk

[N19] LIQUID ROOFING AND WATERPROOFING ASSOCIATION (LRWA). *Code of practice for the specification and use of liquid applied waterproofing systems for Roofs, Balconies and Walkways.* August 2018. LWRA Guidance notes can be found at: www.lrwa.org.uk

[N20] EUROPEAN ORGANISATION FOR TECHNICAL ASSESSMENT. *Liquid applied roof waterproofing kits – Parts 1–8*. ETAG 005. EOTA www.eota.eu

3 Terms and definitions

For the purposes of this British Standard, the terms and definitions given in BS 6100-6 and the following apply:

3.1 breather membrane

continuous layer of highly vapour permeable, but air impermeable, material to permit the movement of water vapour in cold roof constructions

NOTE The level of vapour permeability required is defined in BS 5250.

3.2 condensation

conversion of water vapour to liquid water

3.2.1 condensate

liquid water produced by condensation

3.2.2 harmful condensation

interstitial or surface condensation likely to cause damage to the building fabric, to degrade its thermal performance or to support mould

3.2.3 interstitial condensation

condensation which occurs within or between layers of a roof system

Licensed by Mastic Asphalt Council Limited,Malcolm Grinstead. Current version as of 23 November 2018.
Not to be distributed/networked. If you need multi-user/network access visit www.bsigroup.com/license.

3.2.4 surface condensation

condensation which occurs on surfaces visible within the building

3.3 cricket

wedge of material (usually thermal insulation) to divert the flow of rainwater on a roof

3.4 dew point

temperature at which air becomes saturated with water vapour and condensation occurs

3.5 firrings

battens intended to provide drainage falls or ventilation of a roof void

3.6 layers

3.6.1 air and vapour control layer (AVCL)

continuous layer of low permeability material to control the movement of air and water vapour

NOTE Formerly referred to as VCL in BS 6229:2003.

3.6.2 waterproof layer

layer of impermeable flexible material

3.6.3 water flow reducing layer (WFRL)

robust vapour permeable layer to restrict the flow of water in an inverted roof system

NOTE It also prevents fines from being washed below the insulation, which can damage the waterproofing system or block the roof drainage system.

3.7 roofs

3.7.1 blue roof

roof designed to attenuate the rate at which rainwater is drained from the roof and is allowed to enter the drainage system

3.7.2 flat roof

roof with a weathered surface at no more than ten degrees (10°) to the horizontal

3.7.3 green roof/roof garden

roof on which vegetation or a habitat for wildlife is established

NOTE These can be installed over warm, inverted and uninsulated flat roof constructions.

3.7.4 zero fall roofs

roofs with a slope which lies between 0 and 1:80

3.8 roof deck

support structure of profiled metal or timber

3.9 roof slab

support structure of in situ or pre-cast concrete

Licensed by Mastic Asphalt Council Limited,Malcolm Grinstead. Current version as of 23 November 2018.
Not to be distributed/networked. If you need multi-user/network access visit www.bsigroup.com/license.

© THE BRITISH STANDARDS INSTITUTION 2018 – ALL RIGHTS RESERVED

3.10 root resistant material

membrane that permanently protects the roof's waterproof covering by preventing plant roots or rhizomes from growing into or through it

3.11 tapered insulation

insulation of varying thickness to create or augment drainage falls

3.12 thermal bridge (cold bridge)

part of a roof with thermal resistance significantly lower than that of the surrounding construction

4 Design

4.1 General design considerations

COMMENTARY ON 4.1

The roof of any building is required to separate a controlled internal environment from the external climate: therefore it contains layers to control the movement of rainwater, heat, air, vapour and sound. A roof might also be required to provide a certain level of security.

Depending upon the type of building, the degree of security required and the loads to be supported, the basic structure of a flat roof may either be a heavy reinforced concrete slab or a relatively lightweight deck on supporting beams.

Lightweight decks of plywood or profiled metal, which can be readily cut or prised open, offer a lesser barrier than a concrete slab to attempted illegal entry; such roof systems should not be used on buildings which require a high standard of security.

The slab or deck should provide continuous support to a waterproof layer together with a layer of thermal insulation and a layer (or layers) to control the movement of air and vapour (AVCL): it may incorporate a ceiling, screed, surface paving or reflective treatment, rooflights, vents and attachments such as handrails, gantry rails, fall arrest posts and lightning conductors.

It is essential that the waterproof layer remains imperforate, and that the thermal insulation should not provide less than the degree of thermal resistance demanded by regulation relevant to the building use, whilst the air/vapour controlling layer(s) regulates the movement of air and the transport of water vapour.

The design of a flat roof should take full account of factors likely to have an adverse effect on the performance of the roof construction during the design life of the roof.

NOTE 1 Of primary concern is the risk of physical damage to the waterproof layer and of damaging condensation within or between the layers of construction, including at perimeters and detail penetrations.

NOTE 2 Physical damage can be caused by environmental factors, fire, traffic on the roof, movement of the building structure and by differential movements between layers resulting from variations in temperature or moisture content.

NOTE 3 Harmful condensation might form on or between layers of roof construction as a result of air-borne moisture or water vapour movement through the layers meeting a surface at or below dewpoint temperature (see 3.4).

4.2 Types of flat roof system

COMMENTARY ON 4.2

Flat roof constructions are defined according to the location of the principal thermal insulation and its consequent effect upon the temperature of the roof slab or roof deck.

Licensed by Mastic Asphalt Council Limited,Malcolm Grinstead. Current version as of 23 November 2018.
Not to be distributed/networked. If you need multi-user/network access visit www.bsigroup.com/license.

4.2.1 Warm roof system

*COMMENTARY ON **4.2.1***

In a warm roof system the principal thermal insulation is placed above the slab/deck, resulting in the temperature of that slab/deck being close to that of the building interior (see Figure 1).

Figure 1 — *Typical warm roof system*

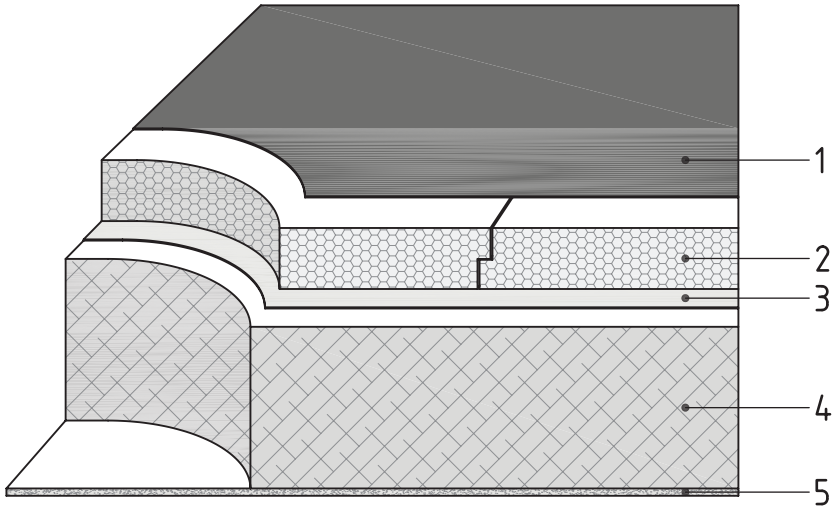

Key

1 waterproof layer with optional surface protection
2 rigid thermal insulation
3 air and vapour control layer (AVCL)
4 structural slab/deck
5 internal finish

NOTE 1 This is the most widely used type of flat roof; it is suitable for most building types.

The insulation should be in the form of tightly butted rigid boards able to sustain the intended loads; they may be square edge boards or, to minimize thermal bridging, with overlapping or interlocking edges.

To reduce the risk of interstitial condensation, an air and vapour control layer (AVCL) should be installed on the warm side of the insulation where it can also control air and heat leakage from within the building.

NOTE 2 If bonded to the deck, this layer can also reduce the wind load on the roof coverings.

The waterproof layer should be resistant to (or protected against) UV degradation, extremes of temperature, and as applicable, foot traffic and plant loading. Together with the insulation and the AVCL, it should be adequately secured against wind uplift.

NOTE 3 In a mechanically fastened system the use of thermally broken fasteners reduces the degree of thermal bridging.

4.2.2 Inverted roof system

*COMMENTARY ON **4.2.2***

In an inverted roof system the principal thermal insulation is placed above the waterproof layer; resulting in the temperature of the slab/deck and of the waterproof layer being close to that of the building interior (see Figure 2).

Licensed by Mastic Asphalt Council Limited,Malcolm Grinstead. Current version as of 23 November 2018.
Not to be distributed/networked. If you need multi-user/network access visit www.bsigroup.com/license.

Figure 2 — *Typical inverted roof system*

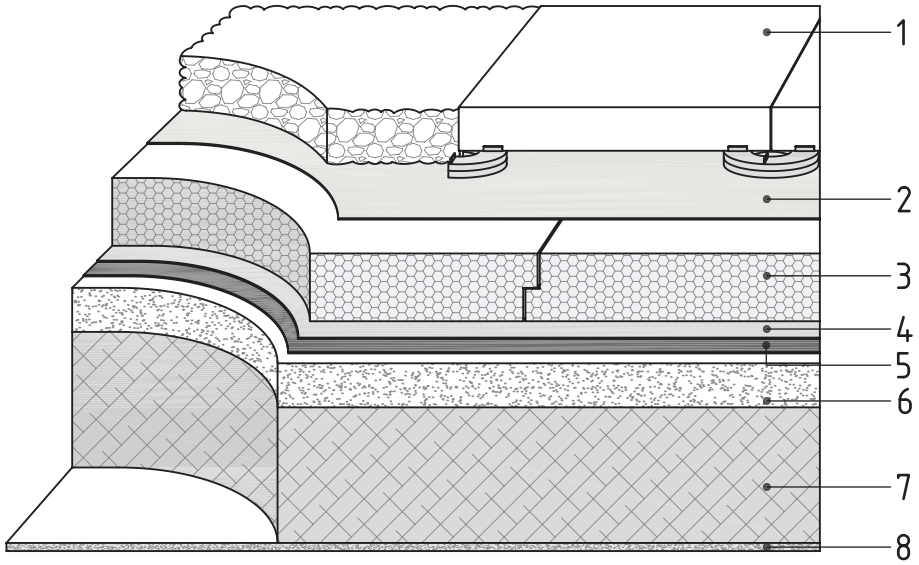

Key

1	ballast or slabs on supports	5	waterproof layer
2	water flow reducing layer	6	screed to falls
3	rigid thermal insulation	7	structural slab/deck
4	drainage layer (optional)	8	internal finish

NOTE 1 This type of flat roof is widely used on civic buildings, hotels, apartment blocks and hospitals. It is ideally suited to roofs which are heavily trafficked, such as car park decks, patios and roof gardens.

The thermal insulation should have high resistance to water absorption, be dense enough to support the loads imposed upon it and have overlapping or interlocking joints to minimize thermal bridging.

*NOTE 2 To regulate the movement of water and protect against dirt and grit penetrating the joints between insulation boards, a water flow reducing layer (WFRL) may be placed on the insulation layer; to assist the flow of water to drainage outlets, a thin drainage layer may be incorporated beneath the insulation. The WRFL is easily damaged or displaced, therefore it is necessary to take great care in its design, installation and maintenance to ensure its long-term effectiveness and integrity. Because of the difficulty of ensuring the long-term effectiveness and integrity of the WRFL on site, i.e. site damage and damage from following trades, the thermal insulation in inverted blue roofs is regularly saturated and therefore the roof system might remain permanently damp and not achieve the expected thermal performance unless an allowance is made to the insulation thickness (see **4.6**).*

NOTE 3 In this type of flat roof, where the temperature of the structure is close to that of the building interior, the waterproof layer provides a vapour control layer and is shielded from mechanical damage, UV degradation and extremes of temperature.

4.2.3 Cold roof system

*COMMENTARY ON **4.2.3***

In a cold roof system the principal thermal insulation is placed below the slab/deck, resulting in the temperature of that slab/deck and waterproof layer being close to that of the external climate (see Figure 3).

Licensed by Mastic Asphalt Council Limited,Malcolm Grinstead. Current version as of 23 November 2018.
Not to be distributed/networked. If you need multi-user/network access visit www.bsigroup.com/license.

Figure 3 — *Typical cold roof system*

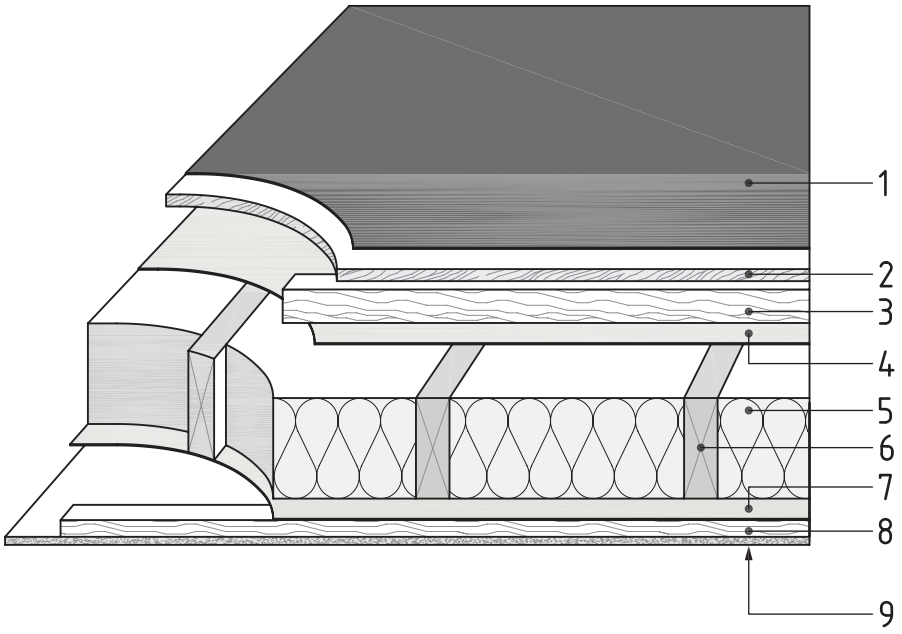

Key

1	waterproof layer with optional surface protection	5	thermal insulation
2	supporting structure/deck	6	structural frame
3	firrings to provide vented void (min. 50 mm deep)	7	air and vapour control layer (AVCL)
4	breather membrane	8	firrings to provide service void (min. 25 mm deep)
		9	internal finish

NOTE 1 This type of flat roof has traditionally been used over small extensions to dwellings using timber joists and plywood deck; because the waterproof layer constitutes a vapour control layer on the cold side of the insulation, there is a high risk of harmful interstitial and surface condensation on the underside of the supporting structure/deck or the upper surface of the insulation. It is essential the risk of interstitial condensation be assessed and appropriate materials specified at the design stage.

NOTE 2 This type of roof is not now recommended. This is because of the difficulty of forming and maintaining an effective AVCL below the insulation and of providing sufficient cross ventilation above the insulation (see BS 5250). Where this type of construction cannot be avoided, the cross-ventilated width between openings greater than 5 m is not recommended. Mushroom vents have proved not to be effective.

A fully waterproof breather membrane should be installed in all cold roof systems on the cold side of the thermal insulation (see Figure 3) to provide both an external air-leakage barrier and as additional protection to the insulation layer against detrimental environmental factors. The membrane should be air-tight (i.e. air-impermeable) but highly vapour open, e.g. less than 0.25 MNs/g (i.e. vapour permeable) and should be taped and sealed to manufacturer's instructions.

NOTE 3 Air-permeable (air-open) breather membranes are not suitable as they allow heat energy to be lost within the roof.

The vapour permeable membrane should allow water vapour to pass through it by diffusion and should also provide a barrier to air, thereby minimizing energy losses.

Licensed by Mastic Asphalt Council Limited,Malcolm Grinstead. Current version as of 23 November 2018.
Not to be distributed/networked. If you need multi-user/network access visit www.bsigroup.com/license.

A continuous air and vapour control layer (AVCL) should be provided on the warm side of the thermal insulation and careful execution is required to ensure it is both continuous and fully sealed.

NOTE 4 The use of battens to support the ceiling boards provides a void which can contain any service cables and pipes thereby avoiding the need to penetrate, and reducing the risk of damage to the AVCL.

The whole of the underside of the deck should be exposed to free movement of air; on small roofs this may be achieved by supporting the deck on firrings not less than 50 mm deep nailed to the joists and the provision of vents at the perimeter of the roof.

NOTE 5 Drainage falls can be achieved by using tapered firrings above level joists or by sloping the joists.

The waterproof layer may be adhered, mechanically fixed or loose laid and ballasted; it should be protected against traffic and UV degradation.

4.2.4 Uninsulated roof system

COMMENTARY ON 4.2.4

In an uninsulated roof system the waterproof layer is placed directly onto the slab/deck (see Figure 4).

Figure 4 — *Typical uninsulated roof system*

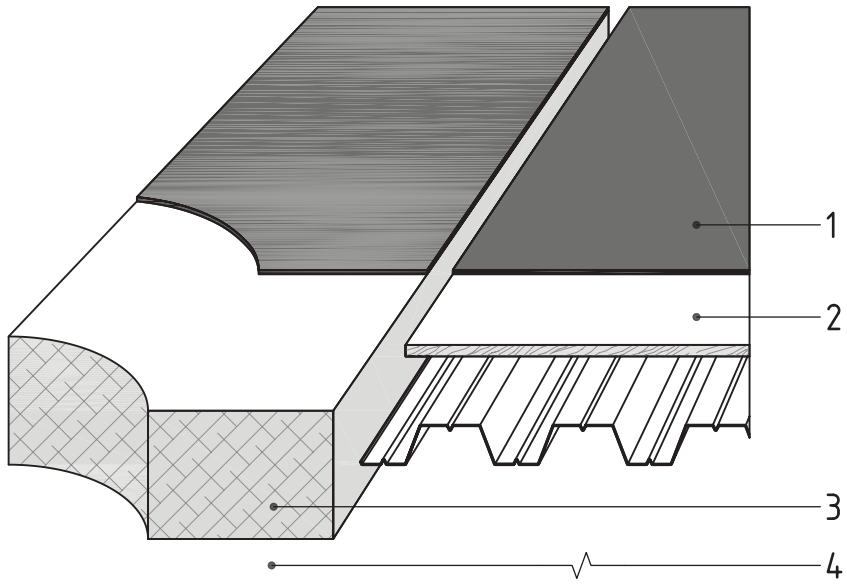

Key

1 waterproof layer with optional surface protection
2 deck of plywood or similar on trapezoidal metal
3 concrete slab
4 internal finish (optional)

NOTE This type of flat roof is used on uninsulated structures such as canopies and unheated buildings; the waterproof layer being applied directly onto the slab or deck.

4.2.5 Hybrid roof system

Hybrid forms of roof construction might combine various features of the three basic insulated systems (see 4.2.1, 4.2.2 and 4.2.3); for example, supporting structure with high thermal insulating properties (such as structural insulating panel systems [SIPS] or composite decks); existing roofs to which thermal insulation is added; or constructions in which the roof waterproofing system is situated between two layers of insulation.

NOTE There is an increased risk of interstitial condensation with a hybrid roof and therefore it is recommended that a full condensation risk analysis is carried out (refer to 4.7).

Licensed by Mastic Asphalt Council Limited,Malcolm Grinstead. Current version as of 23 November 2018.
Not to be distributed/networked. If you need multi-user/network access visit www.bsigroup.com/license.

The designer should select the type of flat roof most suitable for the intended building, its use, form of construction, loading, climate conditions and appearance.

4.3 Structure

The roof structure should be designed for strength and stiffness in accordance with the code of practice for the relevant structural material.

Dead and imposed loads upon a roof should be assessed in accordance with BS EN 1991-1-1 + UK National Annex, taking due consideration of any added surfacing; green roofs, paving slabs, gravel, blue roof water retention, etc.

Snow loads should be assessed in accordance with BS EN 1991-1-3 + UK National Annex.

Wind loads should be assessed in accordance with BS EN 1991-1-4:2005 + A1:2010 + UK National Annex.

Relevant structural material on roof structure strength and stiffness should be assessed in accordance with BS EN 1992-1-1, BS EN 1993-1-1, BS EN 1994-1-1, BS EN 1995-1-1, BS EN 1999-1-1 and their UK National Annexes.

The resistance to wind uplift of the waterproof covering and finishes on a flat roof should be assessed having regard to the dead weight of those materials and to the nature, type and disposition of their attachment to the slab or deck, in accordance with BS 8217 and BS EN 16002.

Whilst a roof slab should be regarded as airtight and where the critical layer is the exposed roof surface, be it the waterproofing, or inverted insulation system, a roof deck might be regarded as air permeable and likely to allow internal air pressures to impinge on the roof system from below.

Wind uplift pressure, in an air-permeable deck, is exerted on the underside of any layer of the construction which is substantially air-impermeable, such as the vapour control layer or the waterproof layer; this pressure, less the appropriate dead weight, should be resisted by adequate mechanical or bonded connections between the air impermeable layer and the deck.

The roof design should take account of possible differential movements within the slab/deck and at junctions with supporting structure, parapets, kerbs and upstands.

NOTE Such movements might be caused by movement of the structural frame or by changes of temperature and moisture content.

4.4 Roof falls to achieve drainage

Ideally the structural deck/slab should be used to introduce falls for drainage; a minimum 1:80 finished fall is recommended to both the general area of the roof and to any formed internal gutters.

All flat roof surfaces (including gutter beds) should be designed with a fall of 1:40 to ensure finished drainage falls of 1:80 are achieved. This should take account of construction tolerances, permitted deviations and deflection under load, and, unless justified by more detailed structural analysis, to account for deflections/settlement. Where two falls intersect, a minimum finished fall of 1:80 along the mitre should be recommended.

NOTE 1 Drainage falls can be achieved by sloping the supporting structure. Alternatively, if the slab/deck is designed flat and level, falls can be achieved (at the cost of increasing total dead load on the roof) by screeding, firrings or by the use of tapered insulation.

Screeds might be of heavy or lightweight aggregate, and be cement or bitumen-bonded; the added weight of a screed increases deflection of the slab. The insulation value of a lightweight screed should be taken into account when assessing the risk of interstitial condensation.

The recommended thickness of a cementitious screed-to-falls bonded to a concrete slab is 40 mm nominal (25 mm minimum), that of an unbonded screed 70 mm nominal (50 mm minimum);

Licensed by Mastic Asphalt Council Limited,Malcolm Grinstead. Current version as of 23 November 2018.
Not to be distributed/networked. If you need multi-user/network access visit www.bsigroup.com/license.

reinforcement should be recommended to control cracking. Dry or insulating and proprietary screeds are available; they should be laid in accordance with the manufacturer's instructions.

NOTE 2 Latex levelling screeds may be used to correct isolated low points.

Certain third-party certified waterproofing and insulating systems are approved for use with zero falls but back falls are not acceptable and should be corrected. In order to ensure a finished surface with a zero fall, a design fall of 1:80 should be used and a detailed structural analysis should account for construction tolerances, settlement and for deflection under load. Where areas are found by a site level survey to have negative falls, i.e. will hold water, remedial action should be taken, e.g. localized screed or additional rainwater outlet.

To prevent ponding caused by lap build ups around rainwater outlets, these should be recessed or fitted in sumps, where practical.

4.5 Rainwater disposal

Rainfall intensity should be assessed in accordance with BS EN 12056-3 having regard to the site location, the detailed form of the roof and the intended use of the building.

The design of most flat roofs should ensure rainwater is drained from the roof as quickly as possible because water ponded on the roof is likely to result in increased stresses in the waterproof layer of exposed warm roofs as a result of temperature differences between wet and dry areas.

NOTE 1 In addition to health risks, ponded water adds dead load which might increase deflection, trap dust and leaves which tend to block outlets and increase the risk of water penetration.

Particular attention should be paid to the controlled disposal of rainwater from green roofs, designed to support planting, and blue roofs, which are designed to attenuate the drainage of rainwater from the roof.

A flat roof might be designed to discharge water to external gutters and downpipes or to internal downpipes connected to outlets within the roof area: the number, size and disposition of those outlets should be determined by reference to BS EN 12056-3. They should not be located adjacent to columns but rather at points of maximum deflection in order to avoid ponding; the recommended minimum drainage fall of 1:80 can also influence the disposition of outlets.

For zero falls, if a detailed structural analysis or a site level survey shows that a back or negative fall cannot be avoided, outlets should be placed at points of maximum deflection.

Roofs which drain to a single internal outlet or combined outlets connected into a single downpipe, and all blue roofs, should be provided with an overflow to drain and warn of outlet/downpipe blockage and so avoid the risk of flooding. The capacity of the overflow should be not less than that of the outlet or combined outlets and its discharge should be visible but directed away from the building.

NOTE 2 Rainwater outlets and downpipes can constitute thermal bridges which increase the risk of localized condensation; an assessment might be required to determine whether insulated outlets are to be used.

Provision should be made to prevent blockage of outlets when loose-laid aggregate is used as surface protection on a flat roof. Localized protection of the waterproof layer should be provided whenever an upper roof discharges rainwater onto a lower one.

At all abutments the waterproof layer should be turned up to a level not less than 150 mm above the adjacent finished roof system. In the case of protected roofing systems, i.e. paving slabs, gravel, green,

Licensed by Mastic Asphalt Council Limited,Malcolm Grinstead. Current version as of 23 November 2018.
Not to be distributed/networked. If you need multi-user/network access visit www.bsigroup.com/license.

etc., that is 150 mm above the upper surface of the protective layer. In exposed retained or attenuated water systems, it should be above the maximum height of the retained or attenuated water.

NOTE 3 A 150 mm upstand is still preferred but if level access is required from within the building, as in the case of the door of a dwelling opening to a balcony or terrace, the height of the upturn may be reduced to not less than 75 mm. Examples are shown in Figures 5, 6 and 7.

Figure 5 — *Example of level access to a warm roof system*

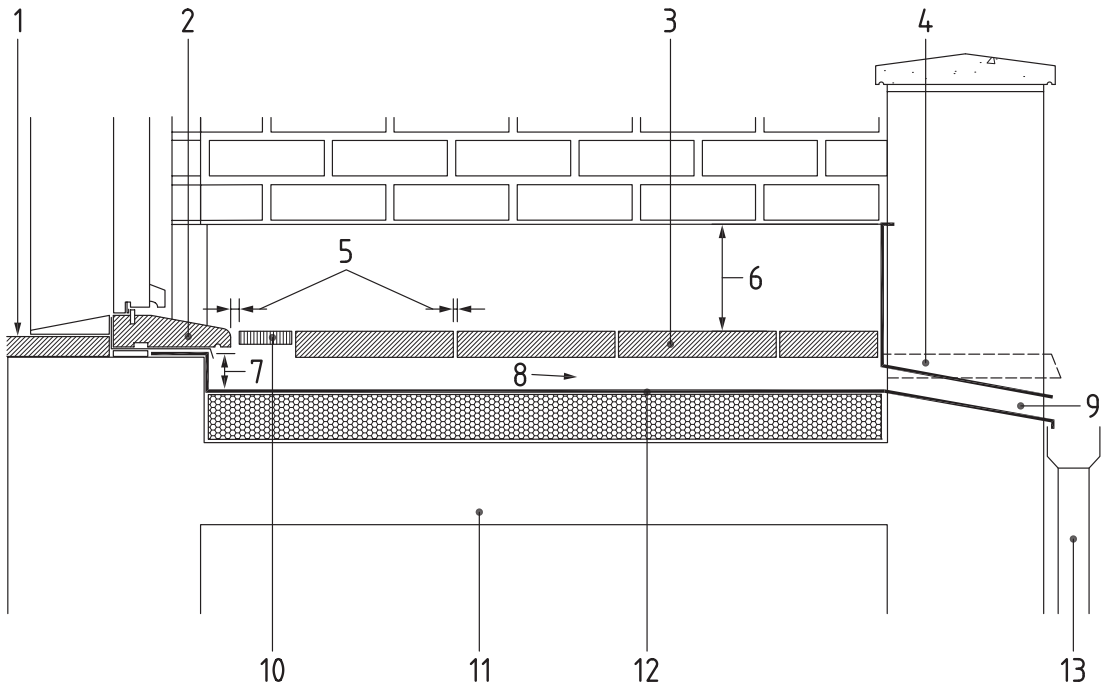

Key

1	finished floor level	8	fall
2	projecting sill and drip (min. 45 mm overhang)	9	main outlet
3	raised and drained decking or paving on drained supports	10	anti-splash grille (optional)
4	overflow/warning pipe outlet min. 25 mm below the underside of the door sill	11	supporting structure
5	min. 10 mm gap between decking/paving and perimeter upstands/thresholds 4-8 mm gap between decking/paving units	12	drainage layer is the waterproofing layer
6	min. 150 mm splash zone	13	rainwater outlet (hopper should not pass through accommodation below)
7	75 mm min. upstand		

NOTE Figure 5 is reproduced, with permission, from the NHBC Technical Standards.

Licensed by Mastic Asphalt Council Limited,Malcolm Grinstead. Current version as of 23 November 2018.
Not to be distributed/networked. If you need multi-user/network access visit www.bsigroup.com/license.

Figure 6 — *Example of level access to an inverted roof system*

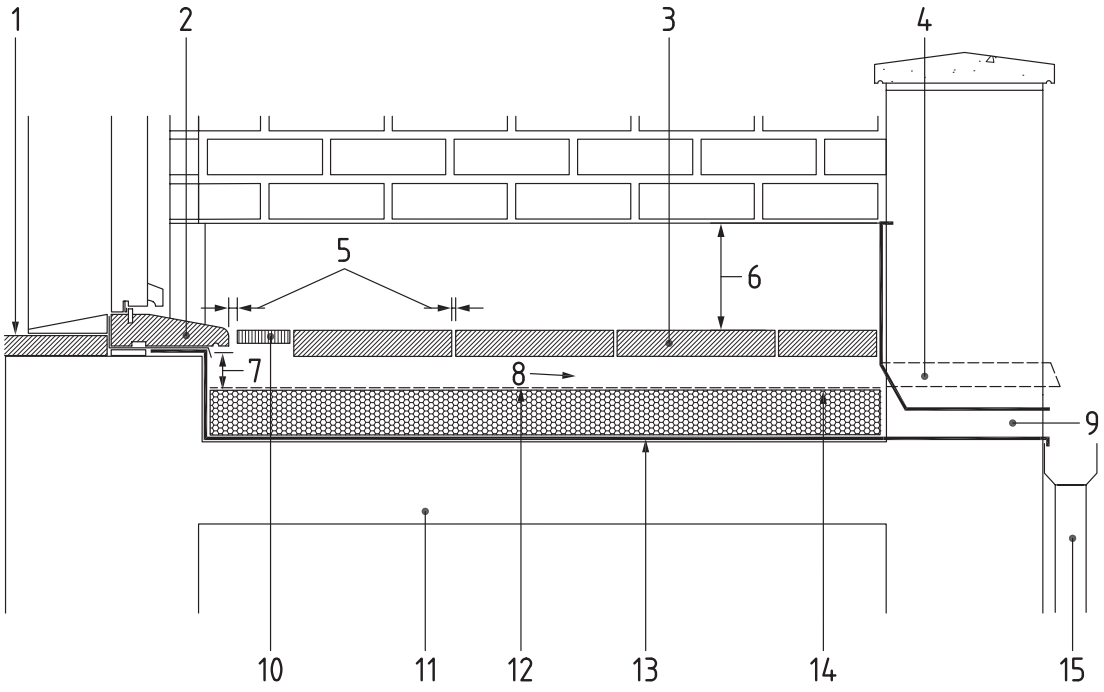

Key

1	finished floor level	9	main outlet
2	projecting sill and drip (min. 45 mm overhang)	10	anti-splash grille (optional)
3	raised and drained decking or paving on drained supports	11	supporting structure
4	overflow/warning pipe outlet min. 25 mm below the underside of the door sill	12	WFRL
5	min. 10 mm gap between decking/paving and perimeter upstands/thresholds 5-8 mm gap between decking/paving units	13	waterproofing layer
6	min. 150 mm splash zone	14	drainage layer is the top of the insulation if WFRL is installed
7	75 mm min. upstand	15	rainwater outlet (hopper is not to pass through accommodation below)
8	fall		

NOTE Figure 6 is reproduced, with permission, from the NHBC Technical Standards.

Licensed by Mastic Asphalt Council Limited,Malcolm Grinstead. Current version as of 23 November 2018.
Not to be distributed/networked. If you need multi-user/network access visit www.bsigroup.com/license.

Figure 7 — *Example of level access to an uninsulated roof system*

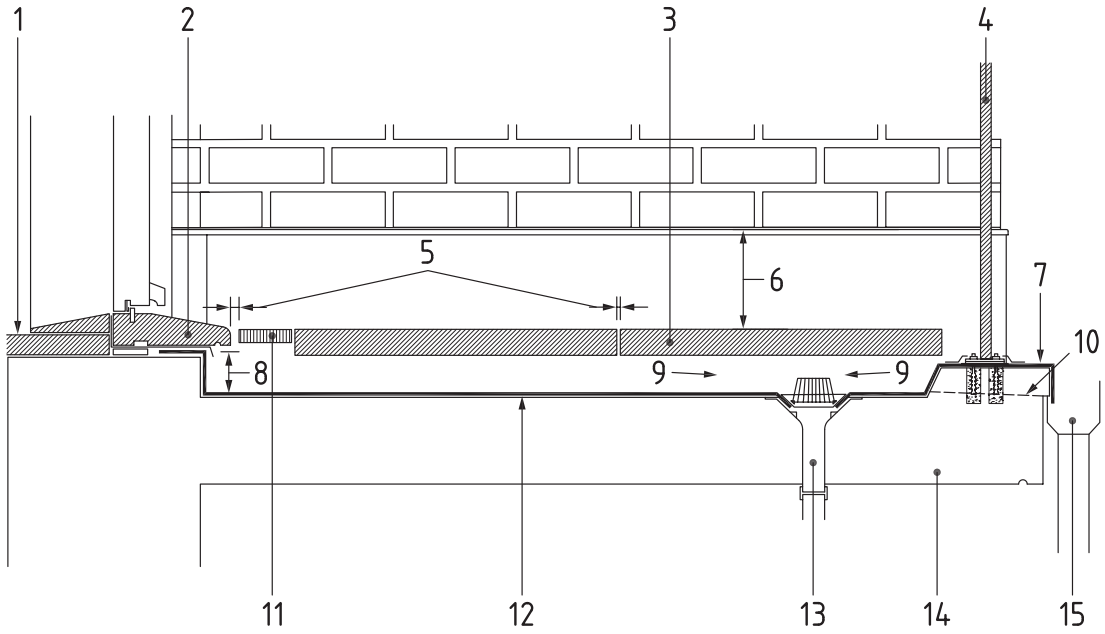

Key

1	finished floor level	9	fall
2	projecting sill and drip (min. 45 mm overhang)	10	alternative outlet into hopper
3	raised and drained decking or paving on drained supports	11	anti-splash grille (optional)
4	balustrading	12	waterproofing/drainage layer with falls to outlet
5	min. 10 mm gap between decking/paving and perimeter upstands/thresholds 5-8 mm gap between decking/paving units	13	rainwater outlet
6	min. 150 mm splash zone	14	supporting structure
7	low kerb min. 25 mm below underside of the door sill to act as overflow	15	alternative hopper discharge
8	75 mm min. upstand		

NOTE Figure 7 is reproduced, with permission, from the NHBC Technical Standards.

4.6 Thermal performance

*COMMENTARY ON **4.6***

*In order to comply with Building Regulations [N2], [1], [2] governing the conservation of fuel and power and limiting carbon emissions, roofs of heated or conditioned buildings incorporate an insulating layer. The position of an insulating layer within the overall roof construction determines the type of roof (see **4.2**).*

4.6.1 General

The designer should select insulation suitable for the roof type, having regard to its load-bearing capacity and, where relevant, its water absorption characteristics. Compressible materials cannot support imposed loads and their use in flat roofs should be limited to cold flat roofs. Warm roofs require the use of rigid insulation, able to support trafficking across the roof whilst the insulation in an inverted roof should also have high resistance to water absorption, freeze/thaw cycling and be shielded from UV light.

Licensed by Mastic Asphalt Council Limited,Malcolm Grinstead. Current version as of 23 November 2018.
Not to be distributed/networked. If you need multi-user/network access visit www.bsigroup.com/license.

4.6.2 Thermal performance

4.6.2.1 General

When calculating the thermal transmittance (U-value) of the flat roof the designer should refer to BS EN ISO 6946, and BRE Report BR 443 [N1]. The design thermal conductivity of the thermal insulation should represent at least 90% of production with a 90% confidence limit and a time averaged aged value over a minimum 25-year life. The thermal conductivity of other components is given in BS EN 12524 or BS EN ISO 10456.

In accordance with the Building Regulations guidance [N2] designers should ensure there are no reasonably avoidable thermal bridges in the insulation layers caused by gaps within the various elements and at the joints between elements and components. Designers should:

a) design details as set out in the Ministry of Housing, Communities and Local Government (MHCLG) Accredited Construction Details [N3] or those formally recognised by the MHCLG; or

b) use construction joint details that have been calculated by a person with suitable expertise and experience following guidance given in BR 497 [N4]; or

c) use the linear transmittance values in the default column of Table K1 in SAP:2012 [N5].

NOTE 1 The linear thermal transmittance values can be used directly in the DER and DFEE rate calculations.

NOTE 2 Alternatively, a conservative default y-value, as defined in SAP [N5], may be used, rather than linear transmittance values for each construction joint in the DER and DFEE rate calculation.

NOTE 3 For calculating linear heat transmittance, ψ-value (W/m·K), associated with non-repeating thermal bridging occurring at junctions use BS EN ISO 14683 or BS EN ISO 10211 by two-dimensional thermal modelling. Refer to BRE Report BR 497 [N4] for more details and conventions for calculations of heat loss via linear thermal bridges. For further information see BRE Information paper IP 1/06 [4].

When an insulation layer is penetrated by roof fasteners, the correction to the thermal transmittance should be calculated in accordance with the approximate procedure given in BS EN ISO 6946 and notes in BR 443 [N1].

If there are significant point thermal bridges, χ, (W/K), occurring where insulation is discretely penetrated, the point thermal transmittances should be calculated by the detailed three-dimensional thermal modelling in accordance with BS EN ISO 10211, in order to obtain the point thermal transmittance due to the point thermal bridge. The correction to the thermal transmittance should then be derived by multiplying χ by the number of point thermal bridges per m^2.

Thermal performance is adversely affected by gaps and omissions in the insulation; the installer should therefore ensure the insulation is installed with close-butted edges between rolls/boards and between the insulation and adjacent structure.

Entrapped or retained construction water in cementitious materials and rainwater on the waterproof layer adversely affects thermal performance; hence the importance of drying techniques and adequate surface drainage should be taken into account.

The addition of thermal insulation to an existing roof changes the hygro-thermal performance of that roof and might result in harmful condensation; it is therefore recommended that a condensation risk analysis should be undertaken.

NOTE 4 Software programs are available which can calculate the U-value, ψ-value, χ-value, and the risk of interstitial condensation in a flat roof. Guidance on suitable design values for roof components is given in CIBSE Guide A: Environmental design — 3: Thermal properties of building structures and manufacturer's quoted values [3] and BR 443 [N1].

Licensed by Mastic Asphalt Council Limited,Malcolm Grinstead. Current version as of 23 November 2018.
Not to be distributed/networked. If you need multi-user/network access visit www.bsigroup.com/license.

4.6.2.2 Inverted roofs

In an inverted roof system with site-applied protection, the inclusion of a water-flow reducing layer (WFRL) immediately above the insulation layer should restrict the cooling effect of cold water flowing across the waterproof layer and into drains. Calculations of the thermal transmittance (U value) of specific roof constructions should be carried out in accordance with BS EN ISO 6946:2017, ETAG 031-1 [N6], BRE Report BR 443 [N1] and BBA Information No 4 [N7], using design thermal conductivity (including moisture conversion factor F_m), the factor for increased heat loss caused by rainwater flowing on the waterproofing layer, x = 0.04 W.day/(m^2.K.mm) and the relevant drainage factor, f, as certified by independent third-party testing.

NOTE Imperfections in the WFRL, resulting from poor detailing or workmanship at the roof perimeter and penetrations, and any post-construction damage, will result in a greater flow of water through to the waterproofing than is indicated when the roof construction is tested in accordance with the Test Method described in Appendix C of ETAG 31-1 [N6]. Until further research and test evidence is made available and included as part of a future update of this standard it would be prudent to increase the design thickness of the thermal insulation, as calculated with correction factors provided by the ETAG test, by not less than 10%. For example, if the design calculation with correction factors dictates a thickness of 240 mm, it is advisable to increase to 264 mm or nearest available board size rounded up to 270 mm.

4.6.2.3 Green inverted roofs

The calculation should be carried out as for other types of inverted roof disregarding the landscaping elements.

NOTE 1 Refer to ETAG 31-1 clause 6.6.1.3 [N6] and use fx=0.02 W.day/(m^2.K.mm) if there is no WRFL and independently certified f drainage factor.

NOTE 2 In green roofs, the design thermal conductivity or resistance value of the landscaping elements can only be included in a U-value calculation if given in a certificate issued by a certification body accredited by a national accreditation service.

4.6.2.4 Blue inverted roofs

In inverted blue roofs with overlapping or tongued and grooved insulation (see Figure 2), irrespective of the covering, the default factor for increased heat loss caused by rainwater flowing on the waterproof layer should be those detailed in ETAG 31-1 clause 6.6.1.3 [N6] for roofs with an open covering, i.e. fx, should be 0.03 W.day/(m^2.K.mm) [f=0.75]. If butt-edged insulation is used, the default value should be 0.04 W.day/(m^2.K.mm) [f=1].

NOTE The test method for determining water flow through an inverted roof kit with or without a WRFL, as described in ETAG 031-1 Annex C [N6], does not allow for a head of water and therefore no correction to fx is permitted for inverted blue roofs.

4.7 Control of condensation

4.7.1 General

Designers should assess the risk of surface and interstitial condensation in accordance with BS 5250 and BS EN ISO 13788, using an external temperature of -5 °C for 60 days during the heating season, to allow for the cooling effect of clear sky radiation.

Care should be taken to ensure that the correct humidity class is selected for the building, particularly for high humidity buildings such as textile mills, paper mills and swimming pools, or certain parts of buildings such as kitchens and bathrooms.

NOTE If there is doubt about the correct humidity class, err on the side of caution and go for the higher class.

The risk should be re-assessed when there is a change of occupancy and/or use.

Licensed by Mastic Asphalt Council Limited,Malcolm Grinstead. Current version as of 23 November 2018.
Not to be distributed/networked. If you need multi-user/network access visit www.bsigroup.com/license.

4.7.2 Surface condensation

Legislation guidance [N8], [N9], [N10], [N11] requires the roof of a heated building be insulated to provide a U-value that does not exceed 0.35 W/m^2K at any point.

In such roofs, provided care is taken to ensure continuity of insulation at the junction between walls and roof and at penetrations, there should be no risk of surface condensation.

NOTE 1 Concrete roof slabs, which have high thermal mass, take time to warm up and to cool down; this is not taken into account by methods of calculation which assume a "steady state" of heat transfer and surface condensation may occur on the underside of a concrete slab at the initiation of space heating.

NOTE 2 There is a greater risk of surface condensation in blue inverted roofs due to the cooling effect of retained rainwater.

4.7.3 Interstitial condensation

The design should preferably avoid the formation of interstitial condensation; however, a small amount of temporary condensation may be acceptable, providing that this is not detrimental to the construction materials. Any condensate which does occur should be shown by calculation to dry out during the course of the year so as to avoid year-on-year accumulation.

NOTE BS EN ISO 13788 uses a simplified calculation procedure based on mean monthly temperature and vapour pressure, and steady state conduction of heat to determine if critical condensation points are reached in a year. It is not suitable where there are air flows within the structure, such as cold roofs, and therefore is a calculation method only suitable for warm roofs.

The risk of condensation within a roof is greatly increased by air leakage which transports water vapour; to prevent this the design should incorporate an air/vapour control layer which is fully sealed at all laps, penetrations and abutments.

4.8 Sound attenuation

*COMMENTARY ON **4.8***

A flat roof might be required to provide sound attenuation when, for example, the building contains noisy activities or processes, or is sited near a source of noise, such as a road, railway or airport. It may also be required to reduce the transmission of impact sound from rain falling on the roof.

The sound attenuation value of a concrete roof slab is inherently greater than that of a lightweight deck; the attenuation value of lightweight decks can be improved by the addition of dense panels or membranes; overall performance of any roof is significantly reduced by the inclusion of rooflights. The amount of sound insulation required in a new or refurbished roof should conform to the recommendations for the control of noise in and around buildings in BS 8233, Building Bulletin 93 (BB93) Acoustic Design of Schools - Performance Standards [N12] and CIRIA Report 127 [N13], which also suggests appropriate noise criteria and limits for different situations.

The incorporation of sound-absorbing materials in the form of perforated metal decking, batts, tiles or quilts beneath a flat roof reduces reverberation times and therefore reduce perceived noise levels within the building; however, the risk of harmful condensation might thereby be increased.

4.9 Fire safety

*COMMENTARY ON **4.9***

National Building Regulations [N14] are designed to limit the risk of fire spreading from compartment to compartment within a building or from one building to a neighbouring building, or vice-versa.

The fire resistance of a roof should be assessed against four criteria:

a) resistance to collapse where the roof is used as a floor (e.g. roof terrace) or a fire escape route;

Licensed by Mastic Asphalt Council Limited,Malcolm Grinstead. Current version as of 23 November 2018.
Not to be distributed/networked. If you need multi-user/network access visit www.bsigroup.com/license.

b) resistance to penetration by fire;

c) surface spread of flame; and

d) ability to provide insulation against high temperature where the roof is used as a floor (e.g. roof terrace) or a fire escape route.

The level of fire resistance of a roof required by the Building Regulations [N14] depends upon the Purpose Group of that building; the main factors that should be considered are:

1) the amount of combustible material in the building;

2) the type of occupancy; and

3) the height of the roof above ground.

NOTE 1 Performance is determined by reference to DD CEN/TS 1187:2012 Test 4 and classified according to BS EN 13501-5. Notional designations of roof coverings, without the need for further testing, can be found in Building Regulations [1] Part B Table A5 and European Commission decision 2000/553/EC.

Any part of a flat roof forming part of an escape route should provide fire resistance of 30 mins when tested from the underside, with the route clearly defined and guarded by walls or barriers.

The design of a flat roof should conform to the recommendations of BS 9999; in particular:

i) compartment walls should be fire stopped at the underside of a non-combustible roof slab/deck; or

ii) the compartment wall should extend not less than 375 mm above the topmost surface of a combustible roof deck; and

iii) concealed voids within the roof or between the ceiling and the roof should be subdivided to conform to the prescribed limits.

NOTE 2 Building Regulations [N2] recognize the risk of fire spread from one building to the roof of another is dependent on distance between buildings; they designate levels of resistance to fire penetration and to surface spread of flame.

Flues passing through a flat roof should be insulated and isolated from any combustible roof structure and finishes, in order to prevent charring of timber and softening of plastic and bitumen-based materials and spread of fire.

NOTE 3 The construction of the roof can affect the cost of insuring a building; guidance on designing to achieve improved fire resistance and protection is given in The LPC Design Guide for the Fire Protection of Buildings 2000. A Code of Practice for the Protection of Business [5].

Where relevant, the specification of products should be in accordance with “Safe2Torch” guidance (NFRC paper) [N15] in order to reduce the risk of fire when working on or around combustible materials.

4.10 Surface protection

The service life to renewal of flat roof coverings is maximized by protecting them against UV light, traffic over the surface and against large variations in temperature, and therefore such protection is inherent in an inverted roof, however in other forms of flat roof the weather-resistance of the exposed surface should be considered: this is particularly important in warm roof constructions where the thermal insulation accentuates heat build-up in the waterproof covering. Dark coloured waterproof layers, such as asphalt and bituminous felt, readily absorb radiant solar heat, which can cause dimensional changes and stress, leading to premature failure; protection should be provided by the application of mineral granules, reflective paint, bonded chippings or ballast.

Licensed by Mastic Asphalt Council Limited,Malcolm Grinstead. Current version as of 23 November 2018.
Not to be distributed/networked. If you need multi-user/network access visit www.bsigroup.com/license.

Where foot traffic can be anticipated across a flat roof – to escape from fire or to access roof-mounted plant and equipment – a designated route should be defined by providing paving slabs or walkways or by a proprietary system, and the protection should be supported clear of the waterproof covering in order to not impede surface water run-off.

NOTE 1 Temporary protection during construction might be required.

On inverted roof systems the insulation and roof covering should be secured against removal or displacement by the combined effects of wind uplift and flotation. On blue roofs it might be necessary to increase the normal level of protection to avoid flotation and care should be taken to ensure that the roof structure can withstand this extra loading in addition to the retained rainwater. Where the insulation is secured by ballast, the minimum aggregate size should be sufficient to prevent wind scour (see BRE Digest 311 [N16]).

Where concrete slabs are used as the ballast they should be raised off the insulation to provide a nominal air gap to assist the removal of water and to help reduce rocking; they may be loose laid on proprietary support pads. To allow for expansion of the paving a nominal 150 mm wide edge strip filled with ballast (clean rounded, nominal diameter 20 mm – 40 mm) or a compatible compressible foam strip should be provided against parapets and upstands, and around rooflights.

NOTE 2 Proprietary systems of lightweight insulation that do not require separate ballasting may also be used, but consideration should be given to their wind uplift resistance and flotation potential (see BRE Digest 295 [6]).

NOTE 3 Green roofs usually require the inclusion of an appropriate root resistant material. This is especially important above inverted insulation under intensive green roofs as no corrective value is available for the damage caused to the insulation over the life of the roof. This can take the form of an independent membrane or a monolithic root resistant version of a waterproofing membrane. The root resistant element might be a chemical or a physical barrier (tested in accordance with BS EN 13948 relating to root penetration of the membrane). Further information on the design of green roofs can be found in the GRO Green Roof Guide [7].

Warm roof constructions with an RBM (reinforced bitumen membrane) as exposed waterproofing and where stored or attenuated water is left exposed, should be protected by site-applied bonded chippings or ballast.

4.11 Rooftop components and installations

*COMMENTARY ON **4.11***

The need to provide daylight, ventilation, smoke extraction or escape from internal rooms often requires the provision of rooflights, vents or hatches which affects the overall thermal and sound performance of a roof, increasing the risk of water penetration and of illegal entry.

When considering the security of a flat roof against illegal entry the designer should refer to the guidance contained in BS 8220-1,-2 and -3 and assess any requirement in conjunction with the security of all other elements, components and services.

NOTE 1 The most vulnerable components within a flat roof are normally rooflights and hatches which might require the provision of security grilles internally and anti-theft fixings of the components.

Plant and equipment essential to the operation of the building, such as air-conditioning units, water storage vessels, solar panels, photo-voltaic cells and aerials, may be installed on a flat roof: detailing of the associated ducts, pipework and cables connecting the installed equipment to the interior of the building should not affect the integrity of the roof.

Small lightweight items may be located on spreaders on top of the roof system; larger heavier items should be set on a kerb or plinth not less than 150 mm high above the finished surface

Licensed by Mastic Asphalt Council Limited,Malcolm Grinstead. Current version as of 23 November 2018.
Not to be distributed/networked. If you need multi-user/network access visit www.bsigroup.com/license.

of the roof system, the kerb or plinth being detailed to provide continuity of the insulation and waterproof layers.

NOTE 2 Proprietary items are available to secure weatherproof fixing of small items such as small vents, handrails and lightning protection tapes.

Special care should be taken to avoid damage to the roof system when detailing penetrations of the roof by hot pipes and flues.

5 Materials

5.1 General

Materials for the construction of a flat roof should conform to relevant standards, codes of practice and guidance documents listed in the following tables.

NOTE 1 Where no national or European standard is available for a material or product, reference can be made to technical approval bodies such as the British Board of Agrément or to BRE papers.

NOTE 2 Proprietary products are increasingly available, such as insulated panels for roofing, insulated rainwater outlets and latex levelling screeds suitable for use in flat roofs.

5.2 Roof slab/deck materials

Materials to form a slab/deck should conform to the relevant standards and, where appropriate, to the recommendations given in related standards shown in Table 1.

Table 1 — *Slab/deck materials*

Material	Specification/Code of practice
Concrete – in situ or precast	DD ENV 1992-1-1
Plywood	BS EN 314-2 BS EN 636 DD CEN/TS 1099
Close boarded timber	BS EN 1313-1 BS EN 1313-2 BS EN 1995-1-1
Oriented strand board (OSB)	BS EN 300
Steel (profiled sheets/panels)	BS EN 10346:2015 BS EN 1993-1 -1
Aluminium (profiled sheets)	BS EN 507 BS EN 1999-1-1 BS EN 1999-1-4
Insulated steel panels	BS EN 1993-1 -1
NOTE Other forms of decking materials are available – including structural insulated panels (SIP) – advice on the use of such panels can be obtained from the Structural Insulated Panel Association: info@structuraltimber.co.uk	

5.3 Screeds

Materials for screeds should conform to the relevant standards, where appropriate, and to the recommendations given in the relevant standards shown in Table 2.

Licensed by Mastic Asphalt Council Limited,Malcolm Grinstead. Current version as of 23 November 2018.
Not to be distributed/networked. If you need multi-user/network access visit www.bsigroup.com/license.

Table 2 — *Materials for screeds*

Material	Specification/Code of practice
Sand and cement	BS 8204-1
No-fines concrete	BS EN 12620
Lightweight aggregates (foamed slag, clinker)	BS EN 13055-1
NOTE Proprietary materials for forming dry, insulating and levelling screeds are also available but are not currently covered by a British Standard.	

5.4 Waterproof layers

Roof coverings should conform to the relevant specifications or other guidance documents, as given in Table 3, and be fitted in accordance with the recommendations given in the related standards or other relevant guidance.

Table 3 — *Materials for waterproof layers*

Material	Specification	Code of practice	Other guidance
Reinforced bitumen membranes	BS 8747 BS EN 13707	BS 8217	
Mastic asphalt	BS 6925	BS 8218	MAC Technical Guide [N17]
Plastic and rubber sheets	BS EN 13956	–	SPRA Design Guide [N18]
Liquid applied waterproofing (hot or cold applied)	–	–	LRWA Design Guide [N19] ETAG 005 [N20]

5.5 Thermal insulation

Thermal insulation materials should conform to the relevant standards, where appropriate, and to the recommendations given in the relevant standards shown in Table 4; they might be in the form of a homogeneous product or a composite structure of two or more factory bonded materials.

Table 4 — *Materials for thermal insulation*

Material	Specification/Code of practice
Resin bonded mineral fibre slabs	BS EN 13162
Expanded polystyrene board (EPS)	BS EN 13163
Extruded expanded polystyrene board (XPS)	BS EN 13164
Rigid urethane foam roof boards	BS EN 13165
Phenolic foam	BS EN 13166
Cellular glass	BS EN 13167
Perlite	BS EN 13169
Cork	BS EN 13170

NOTE Other forms of thermal insulation – including vacuum insulated panels (VIP) and nanogel – which might be suitable for use in flat roofs, are also available.

Thermal insulation for use in inverted roofs should be designed in accordance with ETAG 031-1 [N6].

5.6 Air and vapour control layers

*COMMENTARY ON **5.6***

The in-service performance of an AVCL is critically dependent upon the material, workmanship and buildability.

Licensed by Mastic Asphalt Council Limited,Malcolm Grinstead. Current version as of 23 November 2018.
Not to be distributed/networked. If you need multi-user/network access visit www.bsigroup.com/license.

 © THE BRITISH STANDARDS INSTITUTION 2018 – ALL RIGHTS RESERVED

Membranes to control the movement of vapour should conform to the standards given in Table 5; an AVCL might consist of one or more layers of those materials.

NOTE 1 The choice of membrane is dependent on the temperature and humidity conditions within the building. A single layer reinforced bitumen membrane (RBM) can act as a vapour check but where a high level of vapour resistance is required it might be necessary to provide a two layer vapour control layer, or to use a proprietary foil-laminated bitumen membrane.

Table 5 — *Air and vapour control layers*

Material	Specification
Reinforced bitumen membranes	BS 8747 BS EN 13970
Self-adhesive Polyethylene/ metal foil/ bitumen membranes for cold self-adhesion	BS EN 13970 BS EN 13984
Polyethylene sheet	BS EN 13984
Polyethylene sheet with metal core	BS EN 13984
Plastic and rubber sheets	BS EN 13984
12 mm thick one coat mastic asphalt on glass fibre tissue	BS 6925

NOTE 2 Metal-cored flexible reinforced bitumen membranes are suitable for use to form vapour control layers.

5.7 Vapour permeable membranes (breather membranes)

The in-service performance of a breather membrane is critically dependent upon the material, workmanship and buildability. Membranes should be air-tight (i.e. air-impermeable) but vapour open (i.e. vapour permeable) and should allow water vapour to escape directly through the membrane via moisture vapour transfer only, in order to minimize energy losses.

Vapour resistance values for breather membranes are described in BS 5250. The membrane should also be CE marked to BS EN 13859-1.

6 Workmanship

Before undertaking flat roofing work the contractor should be in possession of complete information detailing the work to be done, the materials to be used and any components to be incorporated.

NOTE 1 As with any other element of a building, successful lifetime performance of a flat roof depends upon workmanship compliant with proper design and clear specification. Careful execution of detail work at penetrations, outlets, kerbs, abutments and fixings is essential.

Premature failure of a flat roof can be caused by the harmful effects of rainwater or construction moisture being incorporated during the course of construction; it is essential great care be taken to avoid that happening and the contractor should make suitable allowance when planning the construction.

Weather conditions are critical; it is important to keep all roofing materials – especially insulation and timber products – dry at all times and to protect roofing work in progress; materials which become wet should be discarded.

NOTE 2 On large roofs, and when re-roofing existing buildings, a temporary over-roof can be provided to allow the work to proceed.

NOTE 3 Construction moisture can become trapped in a roof if the waterproof layer is applied before a concrete slab or screed has had sufficient time to dry out. Whilst a concrete slab in a warm flat roof or an inverted flat roof might dry out downwards into a heated interior, if permanent impervious shuttering is used, drying out can only occur upwards. In situ concrete slabs and cementitious screeds contain large volumes of water which, if not allowed

Licensed by Mastic Asphalt Council Limited,Malcolm Grinstead. Current version as of 23 November 2018.
Not to be distributed/networked. If you need multi-user/network access visit www.bsigroup.com/license.

to dry out, can prevent adhesion of the waterproof layer. If bonding to the slab, it is advised that an adhesion test be carried out.

As each layer of the flat roof system is completed it should be examined and, if necessary, tested: it is particularly important to ensure any vapour control layer and any breather membrane is sealed at all laps, at service penetrations and at junctions between roof and walls.

All completed work should be carefully examined and, if necessary, tested for compliance with the specification for the works; the roof should be clean and free of debris at hand-over.

7 Care and maintenance

7.1 Owner's Building Information Manual

Unless the construction is built to a BIM (Building Information Modelling database) contract, information on the design, specification and construction of the roof should be provided to the building owner on completion. This should include:

a) a set of “as built” drawings;

b) a specification of all materials used and their supplier;

c) a list of designers and contractors responsible;

d) a statement of the proposed use of the building and the psychrometric conditions assumed, together with calculations of the roof’s thermal performance;

e) records of all inspections and tests carried out prior to handover;

f) a copy of any warranties and guarantees, including any terms and conditions;

g) advice on the recommended frequency of inspections and procedures for care and maintenance; and

h) information on health and safety aspects of installed components.

7.2 Inspections

A flat roof should be inspected at least twice yearly; in autumn to ensure it is clear of leaves, dirt and debris, outlets are not blocked and the roof is free draining; in spring to discover and rectify any damage due to weather. Green, blue and other specialist roofs should be inspected in accordance with the designer’s original inspection plan.

NOTE 1 Additional inspections are advisable in the event of extreme weather conditions, vandalism, and construction work on or adjacent to the roof, including the installation of equipment.

Inspections should include the following elements:

a) examination of ceilings for signs of water penetration or condensation followed by examination of external walls, eaves and soffits for signs of movement;

b) the roof should then be inspected for any signs of damage to, or displacement of, the individual layers of construction including, as appropriate, the waterproof layer, the thermal insulation, the WFRL, the surface protection and flashings;

c) the location and extent of any build-up of leaves, moss, plants or debris should be recorded; and

d) the mountings of roof top installations such as safety barriers, fall arrest posts, harness bolts and satellite dishes should be examined to ensure their attachment remains waterproof.

NOTE 2 Electronic devices are available to detect leaks and heat loss.

Licensed by Mastic Asphalt Council Limited,Malcolm Grinstead. Current version as of 23 November 2018.
Not to be distributed/networked. If you need multi-user/network access visit www.bsigroup.com/license.

7.3 Maintenance procedures

Maintenance of a flat roof should involve:

a) removal of all accumulated leaves, dirt and debris;

b) clearance of rainwater outlets, downpipes and gutters;

c) replacement of any surface protection which has been dislodged or removed; and

d) cleaning of vents to the underside of a cold roof.

NOTE It might prove necessary to cut back overhanging branches to reduce leaf fall onto the roof, or to renew mortar or mastic pointing at the top of upstands or counter flashings.

7.4 Repair/renewal

Should inspection discover the need for repair or replacement of any part of the roof, the work should be undertaken as soon as possible but only after appraisal of the original roof design and assessment of the need for modification or improvement.

Repairs should be undertaken using materials and techniques compatible with the original work and, if still under an original guarantee, by the original installer.

If it is decided to renew part or all of a flat roof, a full assessment of the design should first be undertaken in accordance with Clauses **4** to **6**.

All works of inspection, repair and renewal should be recorded in the owner's building information manual.

Licensed by Mastic Asphalt Council Limited,Malcolm Grinstead. Current version as of 23 November 2018.
Not to be distributed/networked. If you need multi-user/network access visit www.bsigroup.com/license.

Bibliography

Standards publications

For dated references, only the edition cited applies. For undated references, the latest edition of the referenced document (including any amendments) applies.

BS 8000-4:1989, *Workmanship on building sites — Part 4: Code of practice for waterproofing*

BS EN 13501-5:2016, *Fire classification of construction products and building elements — Part 5: Classification using data from external fire exposure to roofs tests*

BS EN 13948, *Flexible sheets for waterproofing — Bitumen, plastic and rubber sheets for roof waterproofing — Determination of resistance to root penetration*

BS EN ISO 14683, *Thermal bridges in construction — Linear thermal transmittance — Simplified methods and default values*

DD CEN/TS 1187: *2012*, *Test methods for external fire exposure to roofs*

Other publications

[1] GREAT BRITAIN. *The Building Standards (Scotland) Regulations 1990*, as amended. Technical Standards for compliance Part J: 2001. Edinburgh: ScotExec. www.scotland.gov.uk

[2] NORTHERN IRELAND. *Building Regulations (Northern Ireland)* 1994: Technical Booklet F. Belfast. DOENI. www.doeni.gov.uk

[3] CHARTERED INSTITUTE OF BUILDING SERVICES ENGINEERS. CIBSE *Guide A: Environmental design – Chapter 3: Thermal properties of building structures.* 2015 London: CIBSE. www.cibse.org

[4] BUILDING RESEARCH ESTABLISHMENT. BRE Information paper IP 1/06, *Assessing the effects of thermal bridging at junctions and around openings,* 2006

[5] The LPC Design Guide for the Fire Protection of Buildings 2000. *A Code of Practice for the Protection of Business LPC*

[6] BUILDING RESEARCH ESTABLISHMENT. *Stability under wind load of loose-laid external roof insulation boards*. 1985. BRE Digest 295 (DG 295). Watford: BRE. www.brebookshop.com

[7] *The GRO Green Roof Guide 2014* Published by Groundwork Sheffield www.groundwork.org.uk/sheffield

Further reading

BUILDING RESEARCH ESTABLISHMENT. *Flat roof design, the technical options*. 1986. BRE Digest 312 (DG 312). Watford: BRE. www.brebookshop.com

CHARTERED INSTITUTE OF BUILDING SERVICES ENGINEERS. CIBSE *Guide C, Reference data - Section 1: properties of humid air*. 2001. London: CIBSE. www.cibse.org

HEALTH AND SAFETY EXECUTIVE. *Health and safety in roof work* – HSG 33. London: The Stationery Office. www.tso.co.uk

GREAT BRITAIN. *Construction (Design and Management) Regulations 2015*, London: The Stationery Office. www.tso.co.uk

HEALTH AND SAFETY EXECUTIVE. *The Management of health and safety in construction - Approved code of practice*, (ACOP) HSE. London: The Stationery Office. www.tso.co.uk

Licensed by Mastic Asphalt Council Limited,Malcolm Grinstead. Current version as of 23 November 2018. Not to be distributed/networked. If you need multi-user/network access visit www.bsigroup.com/license.

 © THE BRITISH STANDARDS INSTITUTION 2018 – ALL RIGHTS RESERVED

Licensed by Mastic Asphalt Council Limited,Malcolm Grinstead. Current version as of 23 November 2018.
Not to be distributed/networked. If you need multi-user/network access visit www.bsigroup.com/license.

THIS PAGE DELIBERATELY LEFT BLANK

NO COPYING WITHOUT BSI PERMISSION EXCEPT AS PERMITTED BY COPYRIGHT LAW

British Standards Institution (BSI)

BSI is the national body responsible for preparing British Standards and other standards-related publications, information and services.

BSI is incorporated by Royal Charter. British Standards and other standardization products are published by BSI Standards Limited.

Licensed by Mastic Asphalt Council Limited,Malcolm Grinstead. Current version as of 23 November 2018.
Not to be distributed/networked. If you need multi-user/network access visit www.bsigroup.com/license.

About us

We bring together business, industry, government, consumers, innovators and others to shape their combined experience and expertise into standards -based solutions.

The knowledge embodied in our standards has been carefully assembled in a dependable format and refined through our open consultation process. Organizations of all sizes and across all sectors choose standards to help them achieve their goals.

Information on standards

We can provide you with the knowledge that your organization needs to succeed. Find out more about British Standards by visiting our website at bsigroup.com/standards or contacting our Customer Services team or Knowledge Centre.

Buying standards

You can buy and download PDF versions of BSI publications, including British and adopted European and international standards, through our website at bsigroup.com/shop, where hard copies can also be purchased.

If you need international and foreign standards from other Standards Development Organizations, hard copies can be ordered from our Customer Services team.

Copyright in BSI publications

All the content in BSI publications, including British Standards, is the property of and copyrighted by BSI or some person or entity that owns copyright in the information used (such as the international standardization bodies) and has formally licensed such information to BSI for commercial publication and use.

Save for the provisions below, you may not transfer, share or disseminate any portion of the standard to any other person. You may not adapt, distribute, commercially exploit, or publicly display the standard or any portion thereof in any manner whatsoever without BSI's prior written consent.

Storing and using standards

Standards purchased in soft copy format:

- A British Standard purchased in soft copy format is licensed to a sole named user for personal or internal company use only.
- The standard may be stored on more than 1 device provided that it is accessible by the sole named user only and that only 1 copy is accessed at any one time.
- A single paper copy may be printed for personal or internal company use only.

Standards purchased in hard copy format:

- A British Standard purchased in hard copy format is for personal or internal company use only.
- It may not be further reproduced – in any format – to create an additional copy. This includes scanning of the document.

If you need more than 1 copy of the document, or if you wish to share the document on an internal network, you can save money by choosing a subscription product (see 'Subscriptions').

Reproducing extracts

For permission to reproduce content from BSI publications contact the BSI Copyright & Licensing team.

Subscriptions

Our range of subscription services are designed to make using standards easier for you. For further information on our subscription products go to bsigroup.com/subscriptions.

With **British Standards Online (BSOL)** you'll have instant access to over 55,000 British and adopted European and international standards from your desktop. It's available 24/7 and is refreshed daily so you'll always be up to date.

You can keep in touch with standards developments and receive substantial discounts on the purchase price of standards, both in single copy and subscription format, by becoming a **BSI Subscribing Member**.

PLUS is an updating service exclusive to BSI Subscribing Members. You will automatically receive the latest hard copy of your standards when they're revised or replaced.

To find out more about becoming a BSI Subscribing Member and the benefits of membership, please visit bsigroup.com/shop.

With a **Multi-User Network Licence (MUNL)** you are able to host standards publications on your intranet. Licences can cover as few or as many users as you wish. With updates supplied as soon as they're available, you can be sure your documentation is current. For further information, email subscriptions@bsigroup.com.

Revisions

Our British Standards and other publications are updated by amendment or revision.

We continually improve the quality of our products and services to benefit your business. If you find an inaccuracy or ambiguity within a British Standard or other BSI publication please inform the Knowledge Centre.

Useful Contacts

Customer Services
Tel: +44 345 086 9001
Email (orders): orders@bsigroup.com
Email (enquiries): cservices@bsigroup.com

Subscriptions
Tel: +44 345 086 9001
Email: subscriptions@bsigroup.com

Knowledge Centre
Tel: +44 20 8996 7004
Email: knowledgecentre@bsigroup.com

Copyright & Licensing
Tel: +44 20 8996 7070
Email: copyright@bsigroup.com

BSI Group Headquarters

389 Chiswick High Road London W4 4AL UK

bsi.